MICRO-EPSILON

More Precision

colorSENSOR // True Color Measuring Systems

The colorSENSOR series from MICRO-EPSILON ELTROTEC

True Color sensors from Micro-Epsilon ELTROTEC measure color values, intensities and functions on different surfaces. As a result, they are used in a variety of applications and stand for high productivity and cost reduction in manufacturing, automation and quality assurance.

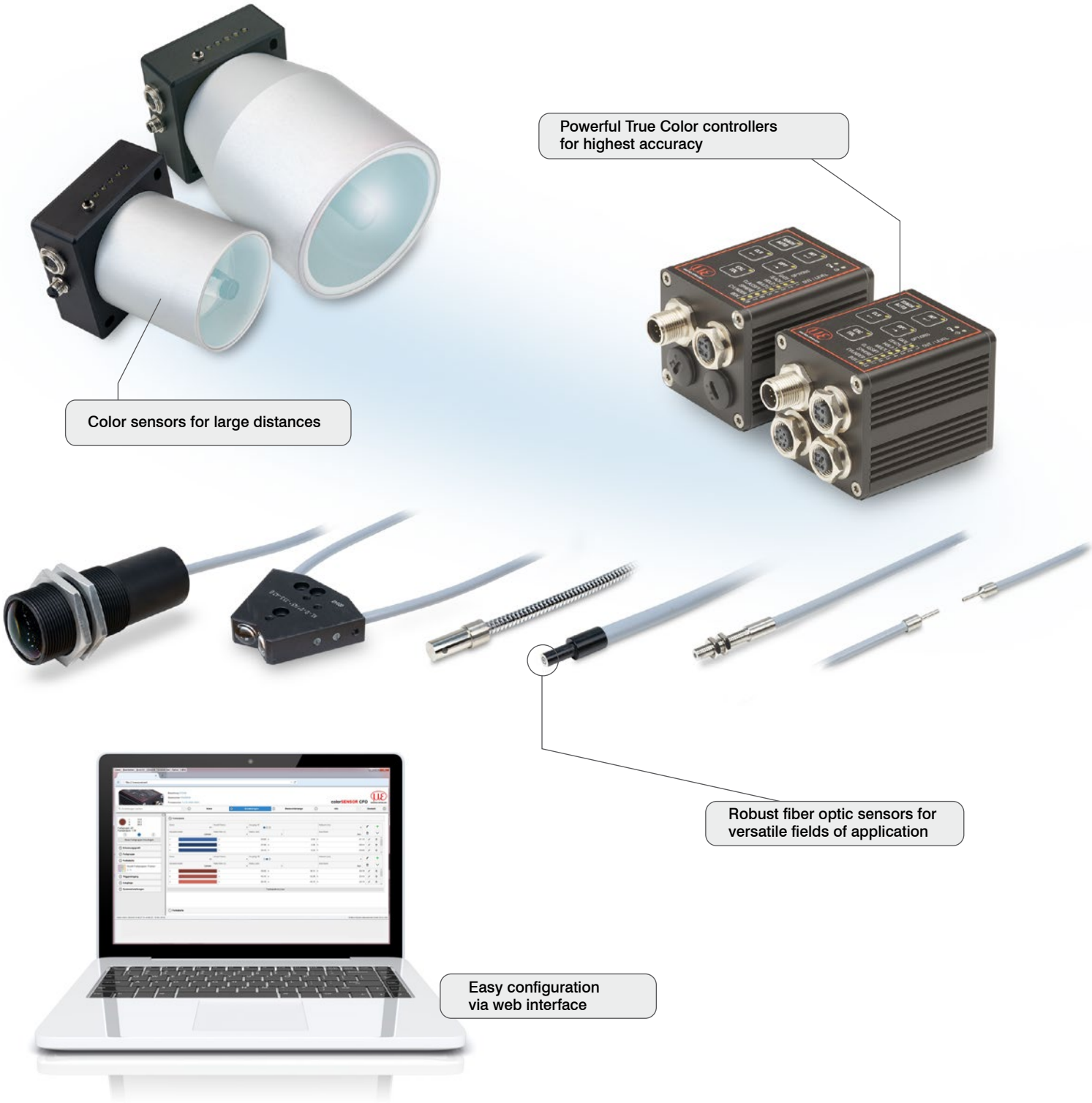

colorSENSOR at a glance

General information	Page
Measuring principle & fields of application	4 - 5
Selection criteria	6 - 7
Applications	8 - 9

Sensor	Type of sensor	Measurement geometry	Measurement spot diameter	Page
colorSENSOR CFS1	Standard sensor	45°x:0° / 20°x:0° / 14°x:0°	7 … 27 mm	10 - 11
colorSENSOR CFS2	Circular sensor	R34°c:0° / R11°c:0°	11 … 70 mm	12 - 13
colorSENSOR CFS3	Transmission sensor	0°:180°	1.5 … 3 mm	14 - 15
colorSENSOR CFS4	Reflex sensor (standard)	0°:0°	0.8 … 30 mm	16 - 19

Controller		Color memory	Repeatability	Page
colorSENSOR CFO100	Universal True Color sensor controller	256 colors	ΔE ≤0.5	20 - 21
colorSENSOR CFO200	High precision True Color sensor controller	320 colors	ΔE ≤0.3	22 - 23
colorSENSOR OT-3-LD	Color sensor for high offset distances	31 colors	ΔE ≤0.9	24 - 25

Accessories	Page
Connection cables & Accessories	26 - 27
Options	28
Basics and selection criteria	29 - 31

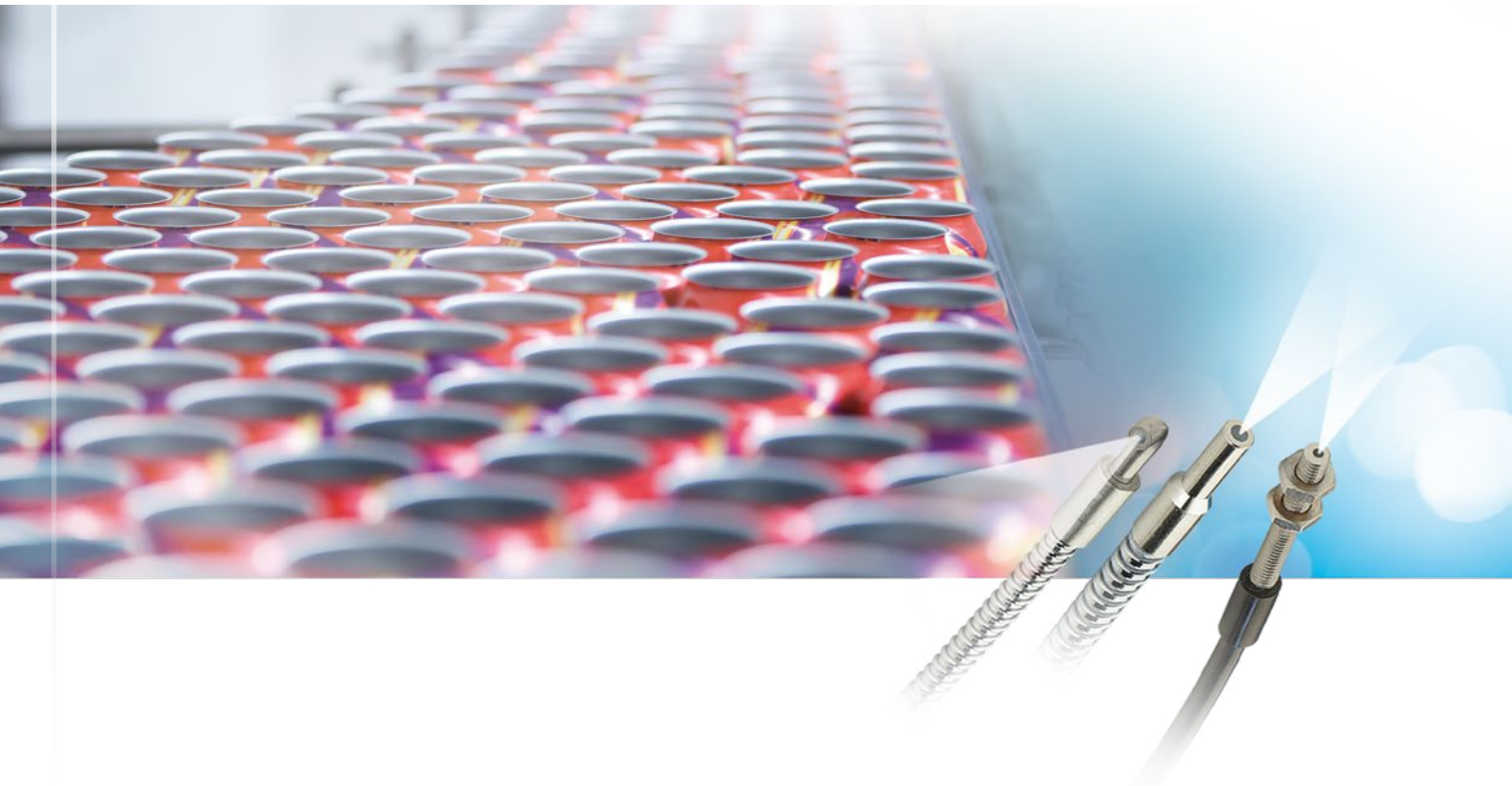

Relative color measurement (= color inspection):
Relative color measurement is often referred to as color inspection. A color sensor first detects the color of a reference pattern and then the color of the measuring object. The controller calculates the so-called color distance (ΔE_{rel}) from the difference between the two values.

➡ If the same controller determines the color distance between a measuring object and a reference sample, this is called relative color measurement (pure color comparison). In the Micro-Epsilon portfolio, the CFO100 & CFO200 and OT-3 series are used for relative color measurement.

The most important feature of color-inspecting systems from Micro-Epsilon is their primary purpose: comparing colors directly in the controller with a reference color taught in advance. The user receives a good/bad evaluation as an output/switching signal. Color measuring systems are therefore not a "raw data supplier" where a subsequent evaluation of the signal is required. The focus of color inspection systems is on the taught-in reference colors.

The colorSENSOR measuring principle
In the field of color inspection, a measurement channel usually consists of a sensor (also referred to as probe head or sensor head) and a controller (evaluation unit). The surface to be measured is illuminated via the sensor cable (fiber optics). The light (color) reflected by the surface is detected by the sensor and evaluated by the controller. The sensors have different measuring geometries and can optionally be extended by mountable lenses for focusing or to achieve larger measurement distances. Models with integrated controller of the OT series are also available for large measurement distances.

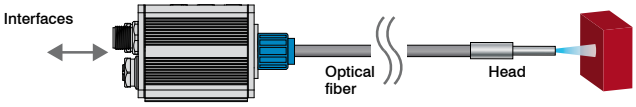

➡ **See pp. 29 - 31 for more details**

Ideal for the detection and inspection of smallest objects

Highest precision even in high speed processes

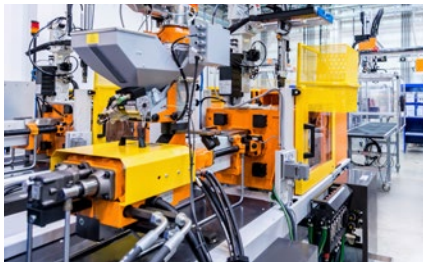
Modern interfaces for integration in industrial environments

High precision True Color measuring system

The colorSENSOR CFO is a True Color controller for precise color recognition in industrial measurement tasks. The CFO series is distinguished by unmatched repeatability, state-of-the-art interfaces and intuitive operation. CFS sensors with integrated optical fibers which can be individually adapted for various measurement tasks, are connected to the controller.

Intuitive operation via web interface

A decisive advantage of the colorSENSOR CFO controller is its easy operation. The integrated, intuitive web interface simplifies configuration of the CFO system. The controller is connected to a PC via an Ethernet interface. The web interface features measurement value display, set up and configuration of e.g. exposure and measurement frequency. Furthermore, the sensor can be adapted to suit different color groups and tolerance spaces for each color. The web interface is not required for standard operation. The controller autonomously evaluates the correctness of the color values.

Customer-specific controller adjustment

In order to improve the recognition performance and to reduce deviating measurement values between several controllers for a certain configuration, customers can request a customer-specific calibration for the colorSENSOR CFO200. Therefore, the sensor and the controller are calibrated to the customer-specific reference object in the measurement arrangement required. A measurement deviation of Delta E < 1 between the individual systems can be achieved. Due to the calibration, the controllers are exchangeable and measure colors which have almost the same Lab values.

Powerful multi-teach feature

254 color groups with more than 320 individual colors can be taught in the CFO controller. The color groups are used among other things to increase color accuracy. Since the detected colors vary with different distances between sensor and measuring object, these color variants can easily be taught into a color group. Individual color groups can be created for different color shades. The color groups thus offer a decisive advantage in the case of geometry-related color deviations.

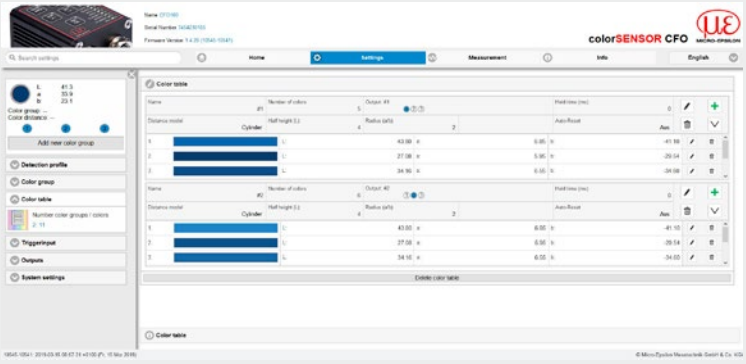

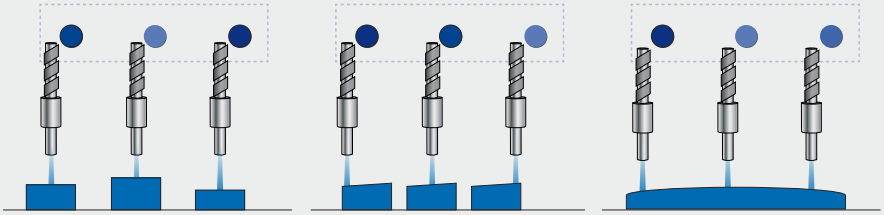

The multi-teach function allows for geometry-dependent color variants to be taught in color groups. The groups can be easily managed using the web interface.

Selection criteria - Sensors

Series	Special features
CFS1-Vxx 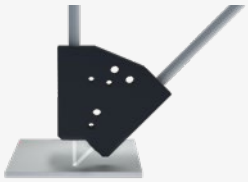	**Standard sensor** ▪ For high-gloss surfaces, diffuse reflection without gloss ▪ Ideally suited for solid colors, anti-reflective coating or chrome colors ▪ Max. working distance of 125 mm (with reflecting surfaces) ▪ Very precise positioning of the detection point
CFS2-Mxx	**Circular sensor** ▪ For structured and metallic-effect surfaces ▪ Ideally suited for textile, paper, metallic paint, metallic nail polish, sand, granulate or masterbatch ▪ Homogeneous illumination of the measuring point ▪ Max. working distance of 100 mm (with reflecting surfaces) ▪ Very precise positioning of the detection point ▪ Measurement spot diameter up to 114 mm
CFS3-Axx / CFS3-Cxx 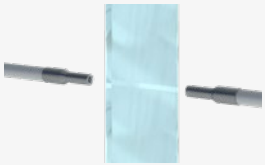	**Transmission sensor** ▪ For transparent surfaces ▪ Ideally suited for films, glasses, translucent liquids (e.g., detergents), filters or PET bottles ▪ Max. working distance between receiver and transmitter unit 50 mm ▪ No exact positioning necessary
CFS4-Axx CFS4-Cxx CFS4-Dxx CFS4-Fxx CFS4-Jxx CFS4-Kxx	**Reflex sensor** ▪ For individual surfaces, direct reflection incl. gloss ▪ Ideally suited for metal (differentiation), plastic parts, thread locking, coating or packaging ▪ For detection of gloss and material differences ▪ Ideal for part recognition, sorting tasks, presence control, color inspections ▪ Detection of the smallest of objects from 0.8 mm ▪ Working distance of 5 ... 200 mm and larger on reflecting surfaces

Selection criteria - Controllers

Series	Special features	Applications
CFO100	▪ Universal True Color sensor controller ▪ Repeatability in color ΔE ≤ 0.5 ▪ Measuring rate max. 10 kHz (up to 2,500 parts per second with asynchronous measurement) ▪ Color memory for 256 colors in 6 color groups ▪ Operation via keys or web interface ▪ Ethernet and RS232 interface ▪ High light output > 130 lm ▪ Color control of self-luminous objects also possible ▪ 3 switching outputs (digital I/O); 8 switching outputs (binary)	▪ Detection of color rings on metal and plastic sleeves ▪ Color values can be read and statistically evaluated ▪ Color mark recognition in printing industry ▪ Color and gray-scale detection ▪ Packaging control ▪ Color sorting tasks (e.g., O-ring control, closures, crown caps, labels) ▪ Color recognition on interior parts (e.g., head supports)
CFO200	▪ High precision True Color sensor controller ▪ Repeatability in color ΔE ≤ 0.3 ▪ Measuring rate max. 30 kHz (up to 7,500 parts per second with asynchronous measurement) ▪ Color memory for 320 colors in 254 color groups ▪ Operation via keys or web interface ▪ Ethernet, RS232 and USB interface, Option with Modbus (PROFINET, EtherNet/IP, EtherCAT possible via Gateway) ▪ High light output > 220 lm ▪ Color control of self-luminous objects also possible ▪ 8 switching outputs (digital I/O); 256 switching outputs (binary)	▪ Detection of color rings on metal and plastic sleeves ▪ Color mark recognition in printing industry ▪ Color and gray-scale detection ▪ Packaging control ▪ Color sorting tasks (e.g., O-ring control, closures, crown caps, labels) ▪ Color recognition on interior parts (e.g., head supports) ▪ Color recognition of exterior parts (e.g., parking sensors, exterior mirrors, etc.) ▪ Coloring of liquids (e.g., oil, apple juice, etc.) ▪ Gray shades of concrete blocks and paving stones ▪ Internal coating of cans ▪ Distinction of materials and coatings (stainless steel/tin or brass/gold) ▪ Color values can be read and statistically evaluated

Selection criteria of sensors with integrated controller

Series	Characteristics	Applications
OT-3-LD	▪ Color sensor for large working distances ▪ Repeatability in color ΔE ≤ 0.9 (≤ 1.5 for LD-500) ▪ Working distance of up to 900 mm ▪ Max. switching frequency: 35 kHz ▪ Color memory for max. 31 colors per teach-in ▪ RS232 interface and optional USB ▪ Color control of self-luminous objects also possible	▪ Color recognition from a large distance up to 900 mm ▪ Correct product positioning in production machines ▪ Packaging control ▪ Color sorting tasks ▪ Color assignment with cars ▪ Detection of bottle crates ▪ Paper recycling recognition ▪ Illumination recognition as per color and intensity

Painted car body components

Comparing colors of parking sensor and car body

Car attachments such as parking sensors are painted separately. However, the colors of the parts must be identical during assembly. For color assignment, the colorSENSOR CFO sensors are used which ensure a direct color comparison between the parking sensor and the rear bumper.

Color inspection on front spoilers

Before installing front aprons, Micro-Epsilon color sensors check if the color of the attachment matches the body color. Different color groups can be defined to cover all coatings.

Color detection of kitchen fronts

Kitchens are available in many different styles and colors. In order to ensure consistent color of different front panels, colorSENSOR systems from Micro-Epsilon are used. The sensors inspect the color of the kitchen fronts in the painting plant. Color sensors ensure that the color shade is within the specified tolerances. Even the smallest color deviations imperceptible to the human eye can be detected reliably. Furthermore, the sensors used inspect if the color is constant over several production batches. This ensures homogeneous colors of different components used for kitchen fronts.

Inspection of the interior coating in aluminum cans

Aluminum cans are painted inside and outside. This transparent varnish protects the can from corrosion and reactions with the filling media. For presence monitoring of the interior varnish, colorSENSOR CFO200 color sensor systems are used. These compact fiber optic sensors inspect the presence of the paint applied inside the tin.

Sorting of plastic components (connector colors)

Particularly with automated mounting, components must be sorted according to their color. With its high measuring rate up to 30 kHz, the colorSENSOR CFO200 is used for sorting different plastic components. Adjustable colors and tolerances enable high flexibility for the measurement task.

Recommended system
CFO200 + CFS3/CFS4

Distinction of shiny nuts

In modern machining centers, the automatic distinction of supplied parts is state of the art. To reliably distinguish shiny nuts made of stainless steel and tin, color sensors are used. The measurement is performed with a compact fiber optic sensor which can also be used in confined installation spaces. The high accuracy of the CFO100 sensor then enables the reliable detection and distinction of the respective metal.

Recommended system
CFO100 + CFS4

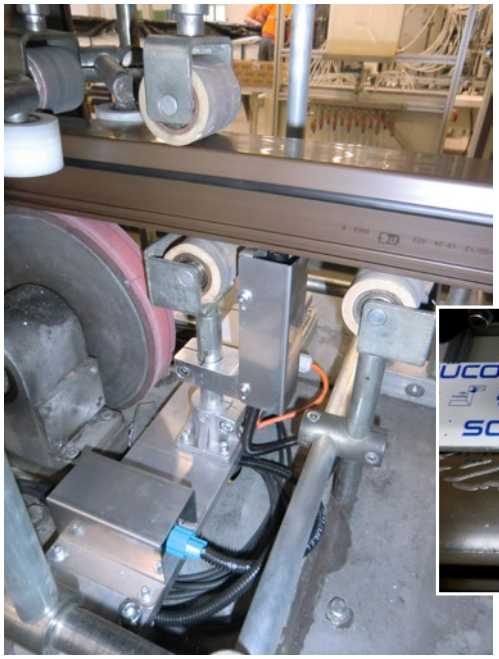

Detection of protective film

For transport protection, plastic profiles are provided with a translucent protective film. This film protects the profiles from defects which can result from the delivery. The CFO200 True Color sensor checks if the film has been applied correctly on the window frame. The color of the window frames alters a little after the film has been applied.
The spectral CFO200 reliably recognizes this color difference reliably. Its high measuring rate enables the measuring system to be used directly in the production line.

Recommended system
CFO200 + CFS4

With the standard sensor, the light emitted by the controller is sent laterally at an angle of 45° (depending on type) onto the surface of the part to be inspected. The diffuse back reflection (surface color) of the sample is detected by the sensor at 0° (parallel) to the surface and transmitted to the controller via an optical fiber. The sensors are available with different measuring angles and spot sizes. Further measuring geometries are optionally available (e.g., 40°x:0°; 18°x:0°; ...)

The angular illumination of the CFS1 enables a punctual illumination of the measuring object without influencing the surface. This means that only the diffusely reflected part of the surface color is detected. This measurement arrangement is best suited for high-gloss and diffuse reflecting surfaces, since direct reflection (surface gloss) does not influence the measurement. The sensor cable has a standard FA connection and is therefore also compatible with other controllers (previous series such as LT or WLCS). The standard sensor offers many advantages in terms of performance and installation possibilities. Due to the external controller, less installation space is required at the measuring point.

Measurement geometry

Standard sensor 45°x:0°, 20°x:0°, 14°x:0°

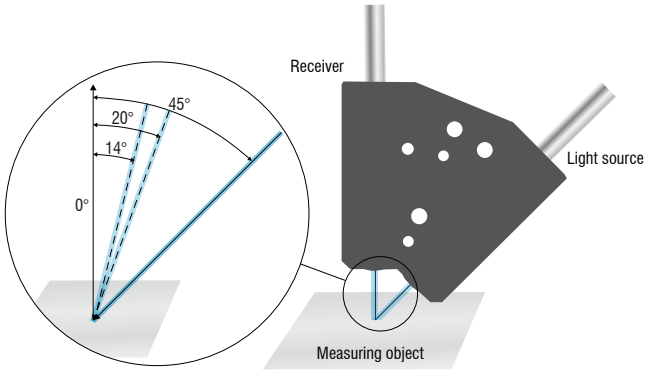

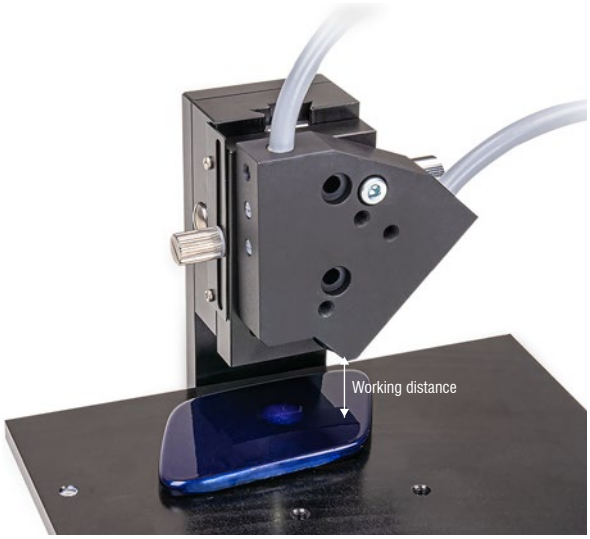

The standard sensor enables measurements of high-gloss surfaces.

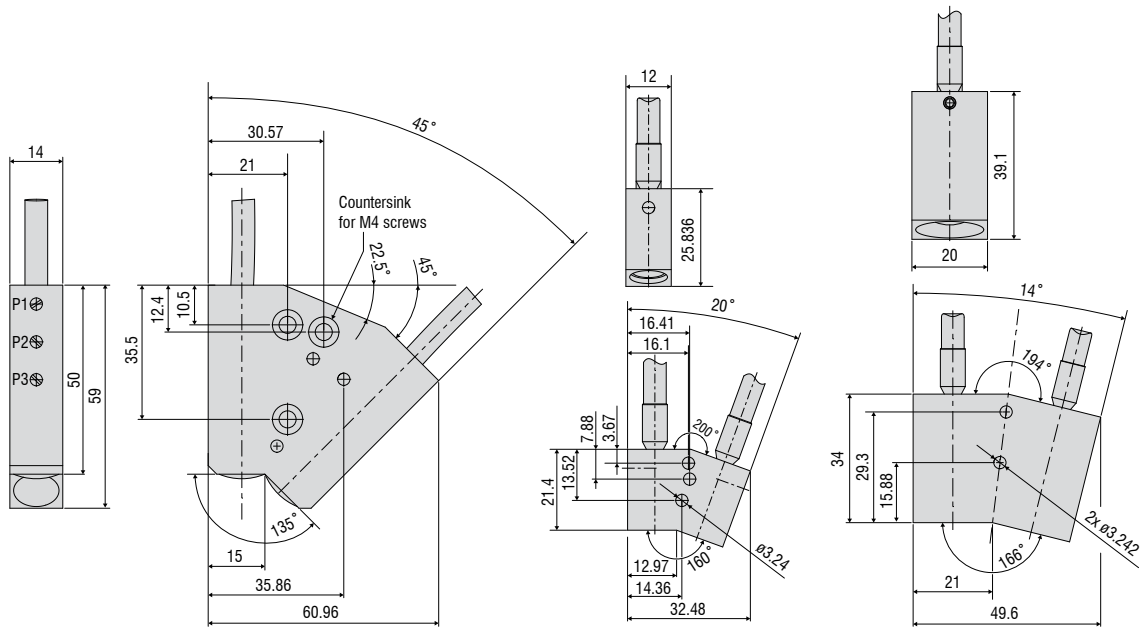

Model		CFS1-V45			CFS1-V20	CFS1-V14
Part number		10824983			10824984	10824985
Type of sensor		Standard sensor				
		P1	P2	P3		
Working distance [1]	Start	12 mm	12 mm	9 mm	20 mm	50 mm
	Optimal	15 mm	15 mm	15 mm	33 mm	86 mm
	End	17 mm	17 mm	23 mm	45 mm	125 mm
Measurement spot diameter [1]	Start	11 mm	7 mm	17 mm	11 mm	19 mm
	Optimal	13 mm	7 mm	11 mm	10 mm	15 mm
	End	14 mm	18 mm	20 mm	18 mm	27 mm
Light spot diameter [1]	Start	15 mm	18 mm	20 mm	13 mm	23 mm
	Optimal	15 mm	18 mm	18 mm	13 mm	27 mm
	End	15 mm	18 mm	20 mm	20 mm	27 mm
Repeatability in rotation [1] [2] [4]		ΔE ≤ 4.7	ΔE ≤ 3.5	ΔE ≤ 3.2	ΔE ≤ 2.5	ΔE ≤ 1.3
Measurement geometry		45°x:0°			20°x:0°	14°x:0°
Min. target size (flat)		Ø 13 mm	Ø 7 mm	Ø 11 mm	Ø 10 mm	Ø 15 mm
Minimum curvature radius of target (curved)		130 mm	70 mm	110 mm	100 mm	150 mm
Sensitivity	Distance [1] [4]	< 24 ΔE / mm	< 12 ΔE / mm	< 2 ΔE / mm	< 3.3 ΔE / mm	< 0.3 ΔE / mm
	Tilt angle [1] [4]	< 1.2 ΔE / °			< 0.5 ΔE / °	< 0.5 ΔE / °
	Ambient light [1] [4]	< 0.3 ΔE / 1,000 lx			< 0.3 ΔE / 1,000 lx	< 0.3 ΔE / 1,000 lx
Permissible ambient light [1] [4]		< 40,000 lx			< 30,000 lx	< 20,000 lx
Max. tilt angle [1] [4]		±9°			±45°	±45°
Connection		integrated fiber-optic cable (axial) with metal-silicone (T) sheath, standard length 1.2 m; other lengths 0.3 ... 2.4 m optionally available				
Mounting		FA (M18x1)				
Temperature range	Storage / operation	Sensor head: -10 °C … +80 °C; cable: -60 °C … +180 °C				
Humidity		20 … 60 % r.H. (non-condensing)				
Protection class (DIN EN 60529)		IP54 [3]				
Material		Aluminum black anodized, glass, glass fiber bundle with metal-silicone coating (T)				
Weight		260 g			180 g	230 g
Compatibility		CFO controller (LT, WLCS, FES)				
Features		This sensor head has three adjustment positions for focusing the measuring spot; all cable variants are also available with different cable sheath, length 0.3 ... 2.4 m, vibration protection, IP protection and suitable for drag chains.			All cable variants are also available with different cable sheath, length 0.3 ... 2.4 m, vibration protection, IP protection and suitable for drag chains.	

The specified data apply to a white, diffuse reflecting surface (zenith white reference)
[1] In combination with colorSENSOR CFO200 and a repeatability of ΔE ≤0.3
[2] On titanium pearl mica from a distance of 30 mm
[3] With potted connection cable also available with IP67
[4] Valid for optimal working distance

With the circular sensor, the light emitted by the controller is sent as an illuminated ring at an angle of 11° or 34° (depending on type) to the surface of the object to be tested. The diffuse back reflection (surface color) of the sample is detected by the sensor at 0° (parallel) to the surface and transmitted to the controller via an optical fiber. The ring illumination makes it possible to detect the diffuse color reflex regardless of structure or reflection. The sensors are available with different illumination angles and different spot sizes. Therefore, it is possible to measure colors with a repeatability of $\Delta E \leq 0.3$ in relative terms up to a working distance of 100 mm. Other sheaths and cable lengths are optionally available.

The circular sensor opens up new fields of application for the colorSENSOR CFO product series. Combined with the high performance of the CFO series, the ring illumination provides even more precision due to uniform illumination. This compact combination can be universally used but is also suitable for special solutions (customer-specific adaptions). The homogeneous illumination mainly offers advantages on strongly structured or shiny-metallic surfaces while providing highest precision when distinguishing colors such as white shades. The circular sensor offers many advantages in terms of performance and installation possibilities. Due to the external controller, less installation space is required at the measuring point.

Due to the standard FA connection, the optical fiber is also compatible with other controllers (previous series such as LT or WLCS).

Measurement geometry

Circular sensor R34°c:0°, R11°c:0°

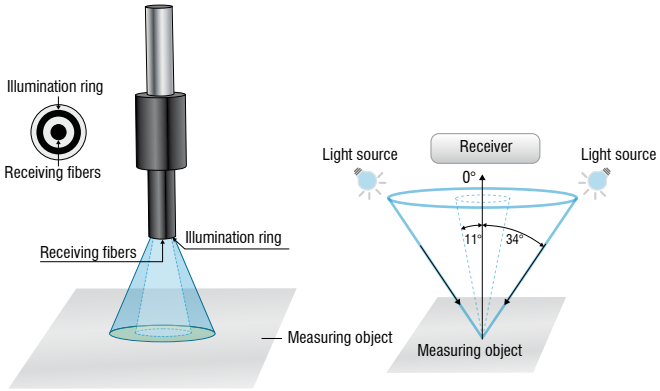

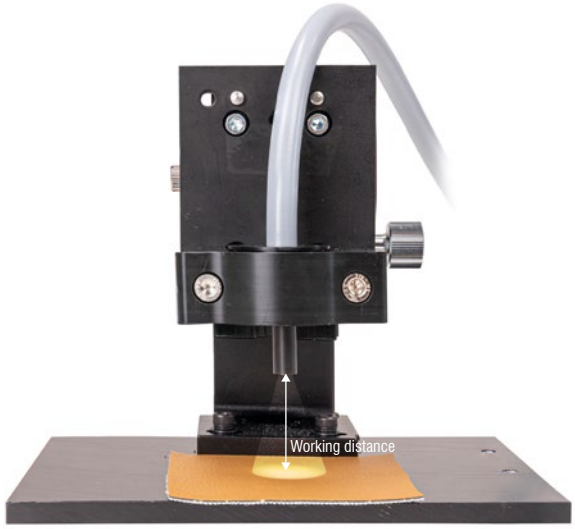

The circular sensor allows an evenly illuminated larger measurement spot.

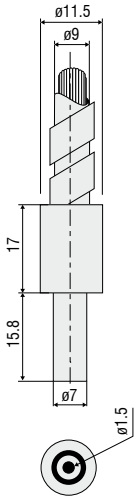

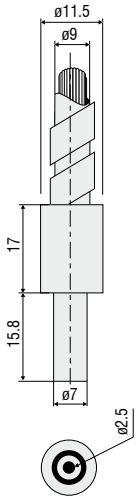

Model		CFS2-M11	CFS2-M20
Part number		10814900	10814895
Type of sensor		Circular sensor	
Working distance [1]	Start	10 mm	10 mm
	Optimal	30 mm	30 mm
	End	60 mm	100 mm
Measurement spot diameter [1]	Start	13 mm	11 mm
	Optimal	35 mm	20 mm
	End	70 mm	66 mm
Light spot diameter [1]	Start	18 mm	11 mm
	Optimal	48 mm	22 mm
	End	85 mm	70 mm
Repeatability in rotation [1) 2) 3)]		ΔE ≤ 0.5	
Measurement geometry		R34°c:0°	R11°c:0°
Min. target size (flat)		Ø 13 mm	Ø 11 mm
Minimum curvature radius of target (curved)		130 mm	110 mm
Sensitivity	Distance [1) 3)]	< 3 ΔE / mm	< 2.5 ΔE / mm
	Tilt angle [1) 3)]	< 0.3 ΔE / °	
	Ambient light [1) 3)]	< 0.3 ΔE / 1,000 lx	
Permissible ambient light [1) 3)]		< 9,500 lx	< 4,500 lx
Max. tilt angle [1) 3)]		±45°	
Connection		integrated fiber-optic cable (axial) with metal-silicone (T) sheath, standard length 1.2 m; other lengths 0.3 ... 2.4 m optionally available	
Mounting		FA (M18x1)	
Temperature range	Storage / operation	Sensor head: -10 °C … +80 °C; cable: -60 °C … +180 °C	
Humidity		20 … 80 % r.H. (non-condensing)	
Protection class (DIN EN 60529)		IP64	
Material		Aluminum black anodized, glass, glass fiber bundle with metal-silicone coating (T)	
Weight		170 g	200 g
Compatibility		CFO controller (LT, WLCS, FES)	
Features		All variants are also available with different cable sheath, length 0.3 ... 2.4 m, vibration protection, IP protection, suitable for drag chains and for temperature ranges up to 2,000 °C. In combination with a pressure-tight feed-through, a stainless steel sheath and T250° bonding, vacuum applications down to 10-5 mbar are also possible.	

The specified data apply to a white, diffuse reflecting surface (zenith white reference)

[1] In combination with colorSENSOR CFO200 and a repeatability of ΔE ≤0.3

[2] On titanium pearl mica from a distance of 30 mm

[3] Valid for optimal working distance

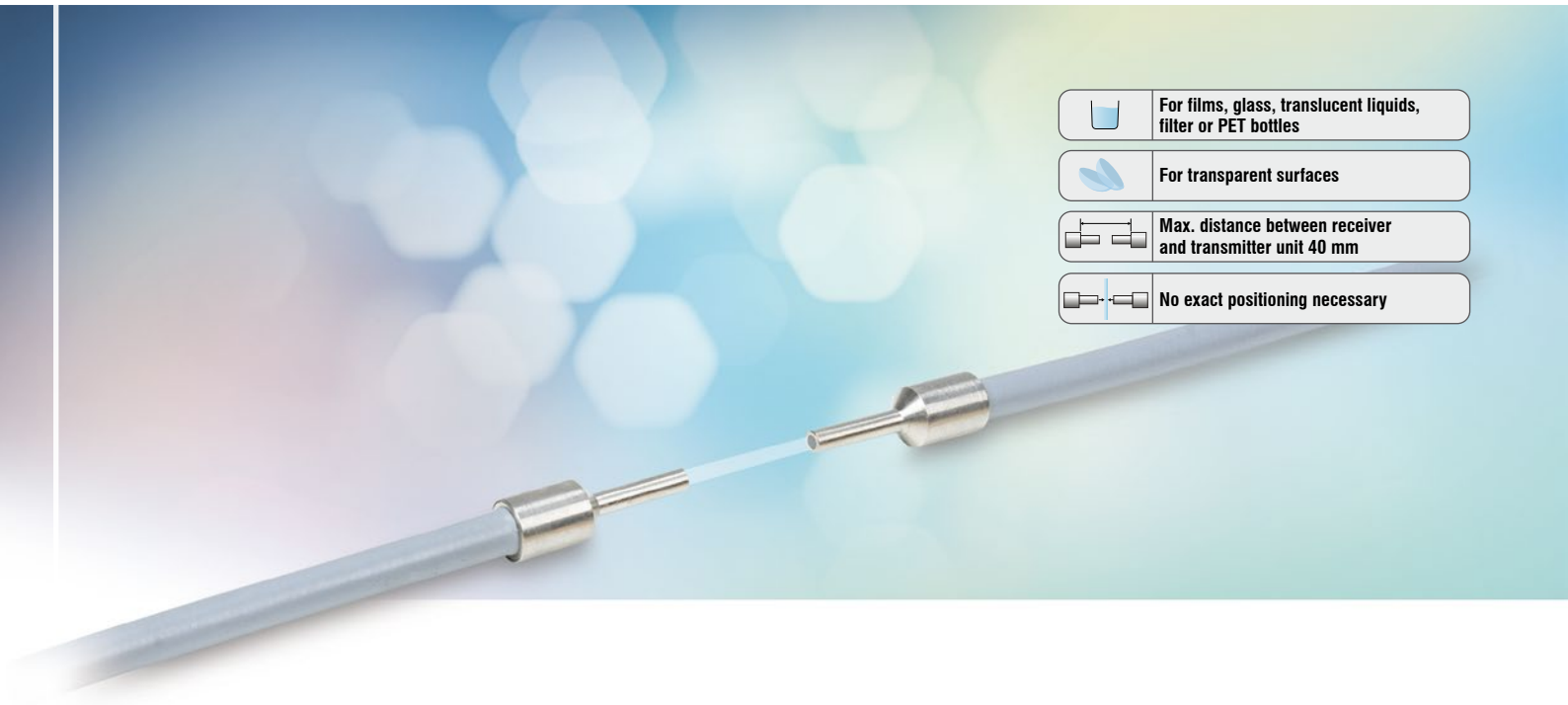

With the transmission sensor, the light emitted by the controller is sent from one side (backlight) at an angle of 180° (parallel) to the surface of the object to be tested. The transmitted light component (material color) of the sample is detected by the sensor from the opposite side at 0° (parallel) to the surface and transmitted to the controller via an optical fiber. Backlighting also makes it possible to measure in relative terms the colors of liquids in a glass tube or glass body, such as apple juice or detergent, with a repeatability of $\Delta E \leq 0.3$. The sensors are available with different ranges (distance between transmitter and receiver) and different spot sizes. Other working distances, sheaths and cable lengths are optionally available.

The transmission sensor enables the measurement of transparent and semi-transparent products such as filters, films and optical lenses. The measurement arrangement in transmitted light 180°:0°, combined with the performance of the CFO series, provides even more precision. Here, the fluctuating distance between the test object and the receiver or illumination has no noticeable influence on the measurement result. The transmission sensor can be universally used but is also suitable for special solutions (customer-specific adaptions). Due to the standard FA connection, the optical fiber is also compatible with other controllers (previous series such as LT or WLCS). The transmission sensor offers many advantages in terms of performance and installation possibilities. Due to the external controller, less installation space is required at the measuring point.

Measurement geometry

Transmission sensor 0°:180°

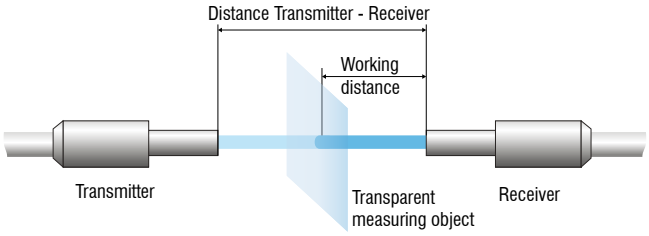

Transmission sensor with transmitter and receiver

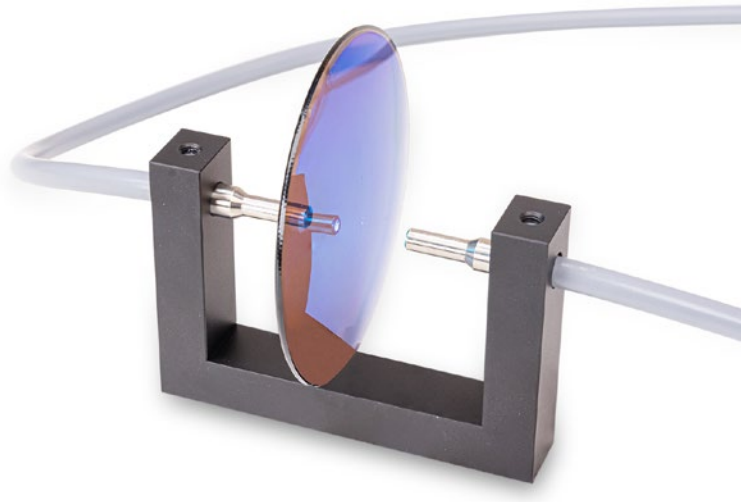

CFS3 transmission sensors are used for color measurements of (semi-)transparent measuring objects such as glass, liquids and plastics.

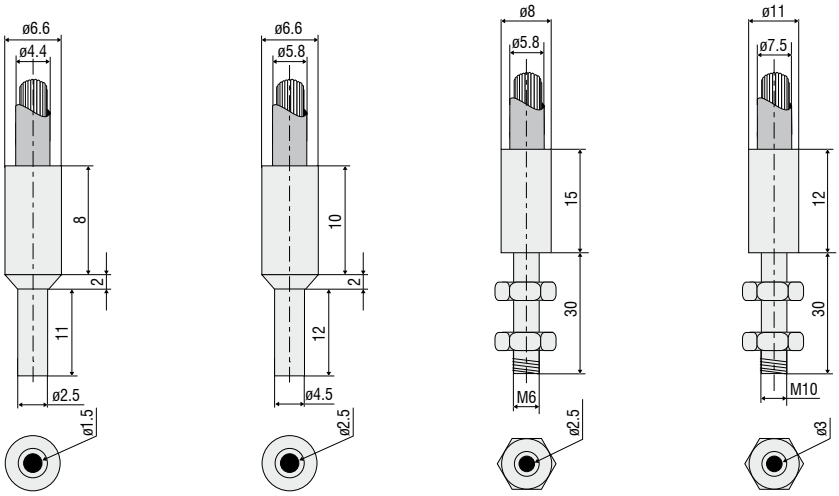

Model		CFS3-A11	CFS3-A20	CFS3-C20	CFS3-C30
Part number		10810518	10810490	10810910	10811921
Type of sensor		Transmission sensor			
Working distance [1]	Start	5 mm	5 mm	5 mm	5 mm
	Optimal	10 mm	10 mm	10 mm	10 mm
	End	15 mm	20 mm	20 mm	20 mm
Measurement spot diameter [1]	Start Optimal End	1.5 mm	2.5 mm	2.5 mm	3.0 mm
Light spot diameter [1]	Start	10 mm	12 mm	12 mm	16 mm
	Optimal	16 mm	20 mm	20 mm	20 mm
	End	24 mm	32 mm	32 mm	38 mm
Working distance Transmitter and receiver	Start	10 mm	10 mm	10 mm	10 mm
	Optimal	20 mm	20 mm	20 mm	20 mm
	End	30 mm	40 mm	40 mm	40 mm
Measurement geometry [2]		0°:180°			
Min. target size (flat)		Ø 1.5 mm	Ø 2.5 mm		Ø 3.0 mm
Minimum curvature radius of target (curved)		15 mm	25 mm		30 mm
Sensitivity	Distance [1) 3)]	< 0.3 ΔE / mm			
	Tilt angle [1) 3)]	< 0.3 ΔE / °			
	Ambient light [1) 3)]	< 0.3 ΔE / 1,000 lx			
Permissible ambient light [1) 3)]		< 40,000 lx			
Max. tilt angle [1) 3)]		±30°			
Connection		integrated fiber-optic cable (axial) with metal-silicone (T) sheath, standard length 1.2 m; other lengths 0.3 m ... 2.4 m optionally available			
Mounting		FA (M18x1)			
Temperature range	Storage / operation	Sensor head: -10 °C … +80 °C; cable: -60 °C … +180 °C			
Humidity		20 … 80 % r.H. (non-condensing)			
Protection class (DIN EN 60529)		IP64			
Material		Stainless steel, glass fiber bundle with metal-silicone sheath (T)			
Weight		90 g	160 g	190 g	280 g
Compatibility		CFO controller (LT, WLCS, FES)			
Features		All variants are also available with different cable sheath, length 0.3 ... 4 m, vibration protection, IP protection, suitable for drag chains and for temperature ranges up to 2,000 °C. In combination with a pressure-tight feed-through, a stainless steel sheath and T250° bonding, vacuum applications down to 10-5 mbar are also possible.			

The specified data apply to transparent LEE filter 130 Clear (Y=95%)

[1] In combination with colorSENSOR CFO200 and a repeatability of ΔE ≤0.3

[2] Can also be used for indirect gloss measurement in angular arrangement 60°:60° (total reflection).

[3] Valid for optimal working distance

Reflex sensor for the distinction of materials and parts

colorSENSOR CFS4

With the reflex sensor, the light emitted by the controller is sent at 0° (parallel) to the surface of the part to be tested. Both diffuse and directly reflected portions are present in the back reflex (surface color + surface gloss). The reflected light components of the sample are also detected by the sensor at 0° (parallel) to the surface and transmitted to the controller via an optical fiber. The sensors are available for different working distances and spot sizes. Other versions in other lengths or temperature ranges are optionally available.

The reflex sensor, combined with the performance of the CFO series, provides even more precise differentiation of the surface characteristics of materials. The measurement arrangement in the reflex sensor of transmitter and receiver in 0°:0° allows a quality control not only by color but also in combination with the reflection properties of the surfaces of the product. This is needed, for example, when sorting different materials such as stainless steel, steel, tin, zinc, aluminum, brass, gold or other colored parts.

Due to the standard FA connection, the optical fiber is also compatible with other controllers (previous series such as LT or WLCS). The reflex sensor offers many advantages in terms of performance and installation possibilities. Due to the external controller, less installation space is required at the measuring point.

Measurement geometry
Reflex sensor 0°:0°

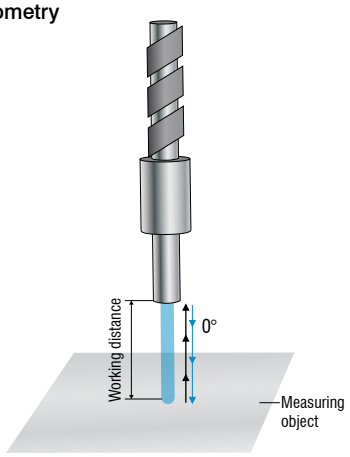

The CFS4 sensors are suitable for color measurements of numerous surfaces such as plastics or metal.

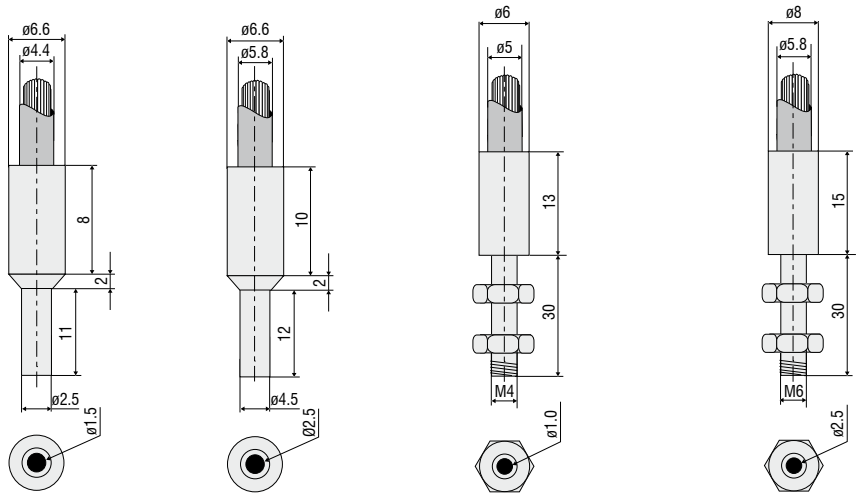

Model		CFS4-A11	CFS4-A20	CFS4-C10	CFS4-C20
Part number		10810487	10810351	10810383	10810568
Type of sensor		Reflex sensor			
Working distance [1]	Start	5 mm	5 mm	5 mm	5 mm
	Optimal	5 mm	5 mm	5 mm	5 mm
	End	15 mm	20 mm	15 mm	20 mm
Measurement spot diameter [1]	Start	8 mm	10 mm	8 mm	10 mm
	Optimal	8 mm	10 mm	8 mm	10 mm
	End	22 mm	28 mm	20 mm	28 mm
Light spot diameter [1]	Start	10 mm	12 mm	8 mm	12 mm
	Optimal	10 mm	12 mm	8 mm	12 mm
	End	24 mm	30 mm	26 mm	30 mm
Repeatability in rotation [1) 2) 4)]		ΔE ≤ 1.2	ΔE ≤ 0.6	ΔE ≤ 1.8	ΔE ≤ 0.6
Measurement geometry		0°:0°			
Min. target size (flat)		Ø 8 mm	Ø 10 mm	Ø 8 mm	Ø 10 mm
Minimum curvature radius of target (curved)		80 mm	100 mm	80 mm	100 mm
Sensitivity	Distance [1) 4)]	< 13.3 ΔE / mm	< 10.4 ΔE / mm	< 13.0 ΔE / mm	< 10.4 ΔE / mm
	Tilt angle [1) 4)]	< 0.3 ΔE / °			
	Ambient light [1) 4)]	< 0.3 ΔE / 1,000 lx			
Permissible ambient light [1) 4)]		< 40,000 lx		< 16,000 lx	< 40,000 lx
Max. tilt angle [1) 4)]		±45°			
Connection		integrated fiber-optic cable (axial) with metal-silicone (T) sheath, standard length 1.2 m; other lengths 0.3 m ... 2.4 m optionally available		integrated fiber-optic cable (axial) with metal (M) sheath, standard length 1.2 m; other lengths 0.3 m ... 2.4 m optionally available	integrated fiber-optic cable (axial) with metal-silicone (T) sheath, standard length 1.2 m; other lengths 0.3 m ... 2.4 m optionally available
Mounting		FA (M18x1)			
Temperature range	Storage / operation	Sensor head: -10 … +80 °C; Cable: -60 … +180 °C		Sensor head: -10 … +80 °C Cable: -40 … +300 °C	Sensor head: -10 … +80 °C Cable: -60 … +180 °C
Humidity		20 … 80 % r.H. (non-condensing)		20 … 60 % r.H. (non-condensing)	20 … 80 % r.H. (non-condensing)
Protection class (DIN EN 60529)		IP64		IP40	IP64
Material		Stainless steel, glass fiber bundle with metal-silicone sheath (T)		Stainless steel, glass fiber bundle with metal sheath (M)	Stainless steel, glass fiber bundle with metal-silicone sheath (T)
Weight		50 g	90 g	60 g	100 g
Compatibility		CFO controller (LT, WLCS, FES)			
Features		All variants are also available with different cable sheath, length 0.3 ... 2.4 m, vibration protection, IP protection, suitable for drag chains and for temperature ranges up to 2,000 °C. In combination with a pressure-tight feed-through, a stainless steel sheath and T250° bonding, vacuum applications down to 10-5 mbar are also possible.			

The specified data apply to a white, diffuse reflecting surface (zenith white reference)
[1] In combination with colorSENSOR CFO200 and a repeatability of ΔE ≤0.3
[2] On titanium pearl mica from a distance of 30 mm
[3] With potted connection cable also available with IP67
[4] Valid for optimal working distance
[5] Only possible in combination with external illumination

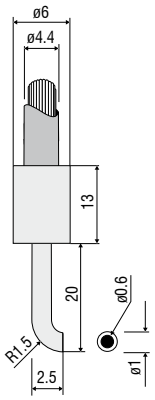

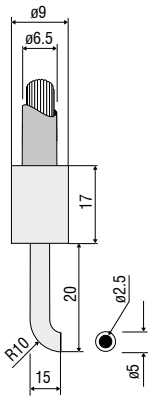

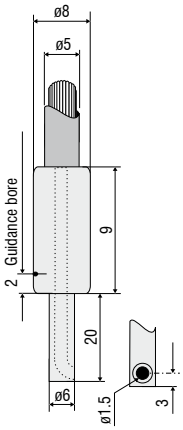

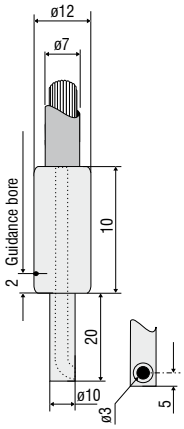

Model		CFS4-D11/90	CFS4-D30/90	CFS4-F10/90	CFS4-F30/90
Part number		10810575	10810699	10810427	10811491
Type of sensor		Reflex sensor			
Working distance [1]	Start	5 mm	5 mm	5 mm	5 mm
	Optimal	5 mm	5 mm	5 mm	5 mm
	End	15 mm	20 mm	15 mm	20 mm
Measurement spot diameter [1]	Start	8 mm	10 mm	8 mm	10 mm
	Optimal	8 mm	10 mm	8 mm	10 mm
	End	22 mm	28 mm	20 mm	28 mm
Light spot diameter [1]	Start	10 mm	12 mm	8 mm	12 mm
	Optimal	10 mm	12 mm	8 mm	12 mm
	End	24 mm	30 mm	26 mm	30 mm
Repeatability in rotation [1) 2) 4)]		ΔE ≤ 0.9	ΔE ≤ 0.6	ΔE ≤ 1.8	ΔE ≤ 0.4
Measurement geometry		0°:0°			
Min. target size (flat)		Ø 8 mm	Ø 10 mm	Ø 8 mm	Ø 10 mm
Minimum curvature radius of target (curved)		80 mm	100 mm	80 mm	100 mm
Sensitivity	Distance [1) 4)]	< 13.3 ΔE / mm	< 10.4 ΔE / mm	< 13.0 ΔE / mm	< 10.4 ΔE / mm
	Tilt angle [1) 4)]	< 0.3 ΔE / °			
	Ambient light [1) 4)]	< 0.3 ΔE / 1,000 lx			
Permissible ambient light [1) 4)]		< 40,000 lx			
Max. tilt angle [1) 4)]		±45°			±30°
Connection		integrated fiber-optic cable (axial) with metal-silicone (T) sheath, standard length 1.2 m; other lengths 0.3 ... 2.4 m optionally available		integrated fiber-optic cable (axial) with metal (M) sheath, standard length 1.2 m; other lengths 0.3 ... 2.4 m optionally available	
Mounting		FA (M18x1)			
Temperature range	Storage / operation	Sensor head: -10 … +80 °C; Cable: -60 … +180 °C		Sensor head: -10 … +80 °C; Cable: -40 … +300 °C	
Humidity		20 … 80 % r.H. (non-condensing)		20 … 60 % r.H. (non-condensing)	
Protection class (DIN EN 60529)		IP64		IP40	
Material		Stainless steel, glass fiber bundle with metal-silicone sheath (T)		Stainless steel, glass fiber bundle with metal sheath (M)	
Weight		70 g	110 g	60 g	100 g
Compatibility		CFO controller (LT, WLCS, FES)			
Features		All variants are also available with different cable sheath, length: 0.3 ... 2.4 m, vibration protection, IP protection, suitable for drag chains and available for temperature ranges up to 2,000 °C. In combination with a pressure-tight feed-through, a stainless steel sheath and T250° bonding, vacuum applications down to 10^{-5} mbar are also possible.			

The specified data apply to a white, diffuse reflecting surface (zenith white reference)
[1] In combination with colorSENSOR CFO200 and a repeatability of ΔE ≤0.3
[2] On titanium pearl mica from a distance of 30 mm
[3] With potted connection cable also available with IP67
[4] Valid for optimal working distance
[5] Only possible in combination with external illumination

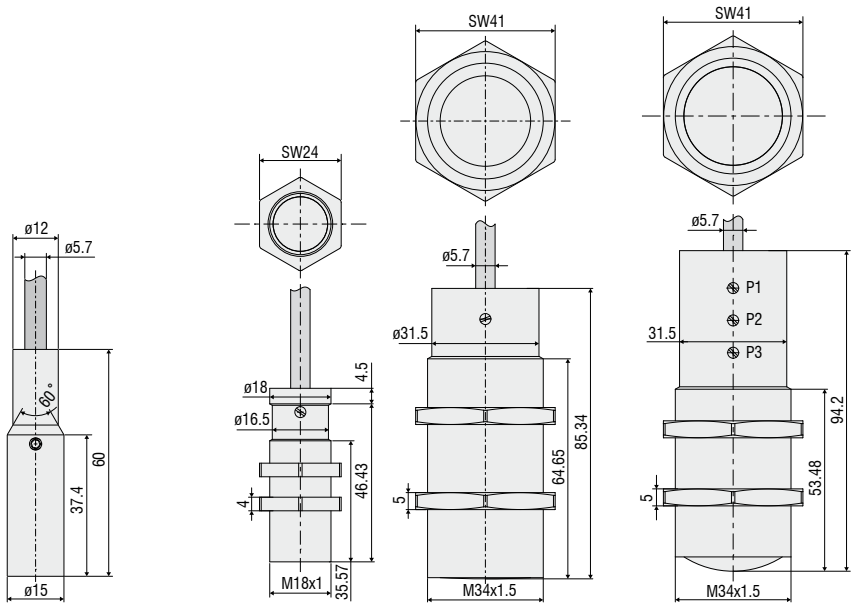

Model		CFS4-J03-0,8	CFS4-J04	CFS4-J03	CFS4-K18	CFS4-K34	CFS4-K34-XL		
Part number		10824987	10824988	10824989	10824990	10824991	10824992		
Type of sensor		Reflex sensor							
							P1	P2	P3
Working distance [1]	Start	8 mm	9 mm	7 mm	7 mm	25 mm	70 mm	80 mm	90 mm
	Optimal	10 mm	11 mm	10 mm	25 mm	170 mm	110 mm	140 mm	200 mm
	End	11 mm	13 mm	14 mm	55 mm	270 mm	150 mm	260 mm	320 mm
Measurement spot diameter [1]	Start	2 mm	1.5 mm	5 mm	9 mm	21 mm	11 mm	16 mm	26 mm
	Optimal	0.8 mm	2 mm	2 mm	6 mm	17 mm	7 mm	8 mm	22 mm
	End	1.5 mm	4 mm	6 mm	12 mm	21 mm	17 mm	26 mm	22 mm
Light spot diameter [1]	Start	2 mm	1.5 mm	5 mm	9 mm	22 mm	12 mm	20 mm	28 mm
	Optimal	0.8 mm	2 mm	3 mm	7 mm	18 mm	7 mm	13 mm	28 mm
	End	2 mm	3 mm	6 mm	24 mm	23 mm	18 mm	28 mm	30 mm
Repeatability in rotation [1) 2) 4)]		ΔE ≤ 13.5	ΔE ≤ 34.0	ΔE ≤ 4.3	ΔE ≤ 1.5	ΔE ≤ 1.2	ΔE ≤ 2.0	ΔE ≤ 1.2	ΔE ≤ 3.5
Measurement geometry		0°:0°							
Min. target size (flat)		Ø 1 mm	Ø 1.5 mm	Ø 2 mm	Ø 6 mm	Ø 17 mm	Ø 7 mm	Ø 8 mm	Ø 22 mm
Minimum curvature radius of target (curved)		10 mm	15 mm	20 mm	60 mm	170 mm	70 mm	80 mm	22 mm
Sensitivity	Distance [1) 4)]	< 33 ΔE / mm	< 18 ΔE / mm	< 11 ΔE / mm	< 2 ΔE / mm	< 0.3 ΔE / mm	< 3 ΔE / mm	< 0.7 ΔE / mm	< 0.3 ΔE / mm
	Tilt angle [1) 4)]	< 0.6 ΔE / °	< 0.4 ΔE / °	< 0.3 ΔE / °					
	Ambient light [1) 4)]	< 0.3 ΔE / 1,000 lx							
Permissible ambient light [1) 4)]		< 40,000 lx				< 4,800 lx	< 30,000 lx	< 10,000 lx	< 4,500 lx
Max. tilt angle [1) 4)]		±45°							
Connection		integrated fiber optic cable axial with metal-silicone (T) sheath, standard length 1.2 m; other lengths 0.3 ... 2.4 m optionally available							
Mounting		FA (M18x1)							
Temperature range	Storage / operation	Sensor head: -10 °C … +80 °C; cable: -60 °C … +180 °C							
Humidity		20 … 60 % r.H. (non-condensing)							
Protection class (DIN EN 60529)		IP54 [3)]							
Material		Aluminum black anodized, glass, glass fiber bundle with metal-silicone coating (T)							
Weight		103 g	110 g	117 g	128 g	290 g	290 g		
Compatibility		CFO controller (LT, WLCS, FES)							
Features		All cable variants are also available with different cable sheath, length: 0.3 ... 2.4 m, vibration protection, IP protection and suitable for drag chains.							

The specified data apply to a white, diffuse reflecting surface (zenith white reference)

[1)] In combination with colorSENSOR CFO200 and a repeatability of ΔE ≤0.3

[2)] On titanium pearl mica from a distance of 30 mm

[3)] With potted connection cable also available with IP67

[4)] Valid for optimal working distance

[5)] Only possible in combination with external illumination

- ΔE — Repeatability in color ΔE ≤ 0.5
- Hz — Measuring rate max. 10 kHz
- INTER FACE — Interfaces: Ethernet / RS232
- Color memory for 256 colors in 6 color groups
- Configurable via web interface or function keys
- High light output >130 lm
- Multi-teach feature

The colorSENSOR CFO100 is a powerful controller for precise color recognition in industrial measurement tasks. The controller is distinguished by high color accuracy, state-of-the-art interfaces and intuitive operation.

Using a modulated high-power white light LED, a white light spot is projected via the fiber optics onto the surface of the measuring object. Part of the light that is back scattered from the target is directed onto a perceptive True Color detector via the same fiber optics, separated into long-, medium- and short-wave light components (X=long, Y=medium, Z=short) and transformed into L*a*b* color values.

The intuitive web interface allows easy teach-in of 6 color groups with up to 256 colors in total. Multi-teach can alternatively be done via the keys. One function alone adapts the illumination, averaging and signal amplification to the current measurement situation. Furthermore, tolerance models and tolerance values can be adjusted individually.

If the sensor recognizes one of the taught colors, the switching state changes via three digital outputs. Using the binary output switching ensures reliable test performance in the face of a discontinuity while providing output of up to 6 color groups.

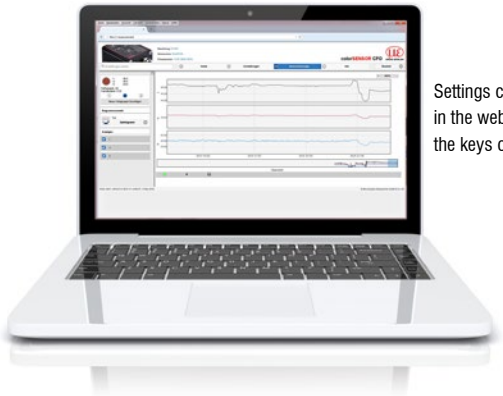

Settings can also be made in the web interface or via the keys on the controller.

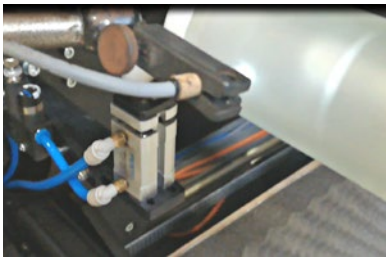

Marking detection on cosmetics bottles

When automatically printing on semi-transparent glass ceramic bottles, it is necessary to determine the exact position for the printing. Therefore, a reference mark for printing is embossed into the bottles. The embossing causes a slight color difference compared to the rest of the bottle surface. This color deviation is detected by the CFO100. This determines the position for the print that is applied below the embossing. If the marking is missing, the bottle is considered as faulty and will be rejected immediately. Therefore at the same time, a good / bad evaluation can be carried out as part of a quality control.

Model		CFO100	CFO100(100)
Part number		10234670	10234670.100
No. of measurement channels		1	
Repeatability [1]		ΔE ≤ 0.5	
Color distance		ΔE ≤ 1.0	
Spectral range		400 ... 680 nm	
Color spaces		XYZ, xyY, L*a*b*, L*u*v*, u'v'L	
Illuminants		D65	
Standard observer		10°	
Tolerance model		Classification; sphere (ΔE); cylinder (ΔL, Δab); box (ΔL, Δa, Δb)	
Color memory		max. 256 colors in non-volatile EEPROM with parameter sets	
Measuring rate		max. 10 kHz, standard 1 kHz (depending on number of colors learned and setting for averaging)	
Temperature stability		< 0.1 % FSO / K	
Light source		white light LED (425 ... 750 nm); AC operation (luminous flux at 1 kHz 130 lm) (adjustable or OFF for primary light source, switchable via software)	
Permissible ambient light		max. 40,000 lx (depending on the CFS sensor)	
Synchronization		Possibility of synchronization is given	
Supply voltage		18 ... 28 VDC	
Max. current consumption		500 mA	
Signal input		1 (IN0), configurable via keys or web interface (trigger, teach, delete, lock, calibration)	
Digital interface		RS232 (standard 19200 Baud) [2], Ethernet	Ethernet, Modbus (TCP/RTU), PROFINET [3], EtherNet/IP [3], EtherCAT [3]
Switching output		OUT0 - OUT2 Push-Pull / NPN / PNP (color recognition, binary coding 6 color groups)	
Connection	optical	screwable optical fiber via FA socket M18x1, length 0.3 m ... 2.4 m, min. bending radius 18 mm	
	electrical	8-pin flange connector M12A (Power/PLC); 4-pin flange socket M12D (PC/Ethernet DHCP-capable); (connection cable see accessories)	
Mounting		DIN rail mounting/screw connection via adapter (see accessories)	
Temperature range	Storage	-10 … +85 °C	
	Operation	-10 … +55 °C	
Humidity		20 … 80 % r. H. (non-condensing)	
Shock (DIN EN 60068-2-27)		15 g / 6 ms in 3 axes, 2 directions and 1000 shocks each	
Vibration (DIN EN 60068-2-6)		2 g / 10 … 500 Hz in 3 axes, 10 cycles each	
Protection class (DIN EN 60529)		IP65 (when connected)	
Material		Aluminum, black anodized	
Weight		approx. 200 g	
Compatibility		with all CFS sensors [4]	
Control and display elements		Operation via keys and web interface, visualization with 13 white LEDs	
Features		Multi-color teach function, automatic adjustment of illumination brightness, measurement signal amplification and averaging depending on the measurement frequency, adjustable hold time of > 30 µs	

FSO = Full Scale Output

[1] Maximum color distance ΔE of 1000 successive measurements of the color value of a red and a dark gray reference tile (R = 5%), measured with the CFS4-A20 sensor at 1000 Hz and brightness adjustment with a white standard (R = 95%)

[2] Adjustable up to max. 115200 Baud

[3] Optional connection via interface module

[4] Also compatible with previous series (FAR, FAD, FAL, FAZ and FAS)

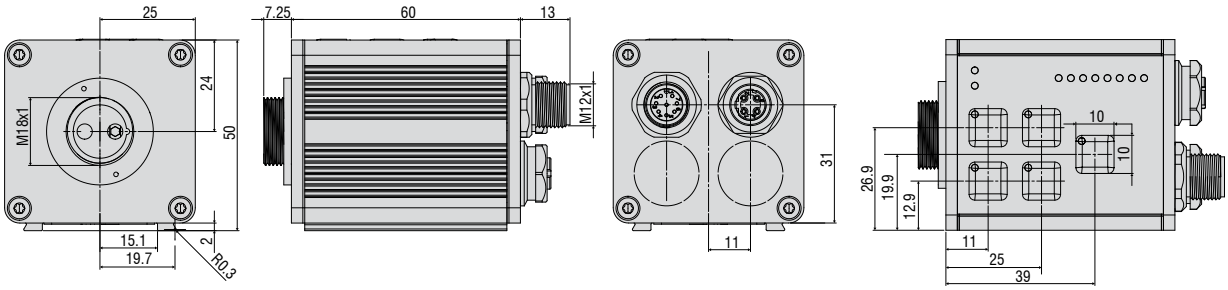

Dimensions:

Dimensions in mm, not to scale

The colorSENSOR CFO200 is a high-performance controller for precise color recognition in industrial measurement tasks. The controller is distinguished by high color accuracy, state-of-the-art interfaces and intuitive operation.

Using a modulated high-power white light LED, a white light spot is projected via the fiber optics onto the surface to be detected. Part of the light that is back scattered from the target is directed onto a perceptive True Color detector via the same fiber optics, separated into long-, medium- and short-wave light components (X=long, Y=medium, Z=short) and transformed into L*a*b* color values.

The intuitive web interface allows easy teach-in of 254 color groups with 320 colors in total. Multi-teach can alternatively be done via the keys. One function alone adapts the illumination, averaging and signal amplification to the current measurement situation. Furthermore, tolerance models and tolerance values can be adjusted individually.

If the sensor recognizes one of the taught colors, the switching state changes via 8 digital outputs. Using the binary output switching ensures reliable test performance in the face of a discontinuity while providing output of up to 254 color groups.

The CFO controller is also suitable for detecting the color of self-luminous objects. For this purpose, the internal illumination can optionally be deactivated via the software.

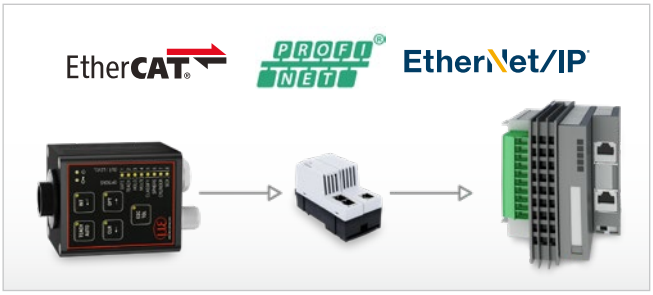

Ideal for integration in modern environments

The CFO200 can be connected via Ethernet, Modbus, RS232 and USB.
Via an additional interface module, PROFINET, Ethernet/IP and EtherCAT are available.

Recognition of anti-reflection coating on lenses

Optical surfaces of many lenses have an anti-reflection coating which should reduce surface reflections. These anti-reflective layers must be applied evenly; otherwise undesired color gradients may occur which might impair the function of the lens. In order to inspect the visual color impression (green-blue for highly sophisticated coatings) and the coating quality, CFO200 color sensors are used. The standard sensors detect the color reflection of the lenses. Due to its high resolution, the CFO200 detects even the slightest of color variations reliably.

Model		CFO200	CFO200(100)
Part number		10234671	10234671.100
No. of measurement channels		1	
Repeatability [1]		ΔE ≤ 0.3	
Color distance		ΔE ≤ 0.6	
Spectral range		400 ... 680 nm	
Color spaces		XYZ, xyY, L*a*b*, L*u*v*, u'v'L	
Illuminants		D65	
Standard observer		10°	
Tolerance model		Classification; sphere (ΔE); cylinder (ΔL, Δab); box (ΔL, Δa, Δb)	
Color memory		max. 320 colors in non-volatile EEPROM with parameter sets	
Measuring rate		standard 1 kHz; max. 30 kHz (depending on number of colors learned and setting for averaging)	
Temperature stability		< 0.1 % FSO / K	
Light source		white light LED (425 ... 750 nm); AC operation (luminous flux at 1 kHz 220 lm) (adjustable or OFF for primary light source, switchable via software)	
Permissible ambient light		max. 40,000 lx (depending the CFS sensor)	
Synchronization		Possibility of synchronization is given	
Supply voltage		18 ... 28 VDC	
Max. current consumption		500 mA	
Signal input		4 (IN0 - IN3): IN0 via keys; IN0 - IN3 configurable via web interface (trigger, teach, delete, lock, calibration)	
Digital interface		RS232 (standard 19200 Baud) [2], Ethernet, USB	Ethernet, Modbus (TCP/RTU), USB, PROFINET [3], EtherNet/IP [3], EtherCAT [3]
Switching output		OUT0 - OUT7 Push-Pull / NPN / PNP (color recognition, binary coding 254 color groups)	
Connection	optical	screwable optical fiber via FA socket M18x1, length 0.3 m ... 2.4 m, min. bending radius 18 mm	
	electrical	8-pin flange socket M12A (Power/PLC); 8-pin flange socket M12A (signal); 4-pin flange socket M12D (Ethernet DHC capable); 5-pin flange socket M12A (USB) (connection cable see accessories)	
Mounting		DIN rail mounting/screw connection via adapter (see accessories)	
Temperature range	Storage	-10 … +85 °C	
	Operation	-10 … +55 °C	
Humidity		20 ... 80 % r. H. (non-condensing)	
Shock (DIN EN 60068-2-27)		15 g / 6 ms in 3 axes, 2 directions and 1000 shocks each	
Vibration (DIN EN 60068-2-6)		2 g / 10 … 500 Hz in 3 axes, 10 cycles each	
Protection class (DIN EN 60529)		IP65 (when connected)	
Material		Aluminum, black anodized	
Weight		approx. 200 g	
Compatibility		with all CFS sensors [4]	
Control and display elements		Operation via keys and web interface, visualization with 13 white LEDs	
Features		Multi-color teach function, automatic adjustment of illumination brightness, measurement signal amplification and averaging depending on the measurement frequency, adjustable hold time of > 30 µs	

FSO = Full Scale Output

[1] Maximum color distance ΔE of 1000 successive measurements of the color value of a red and a dark gray reference tile (R = 5%), measured with the CFS4-A20 sensor at 1000 Hz and brightness adjustment with a white standard (R = 95%)

[2] Adjustable up to max. 115200 Baud

[3] Optional connection via interface module

[4] Also compatible with previous series (FAR, FAD, FAL, FAZ and FAS)

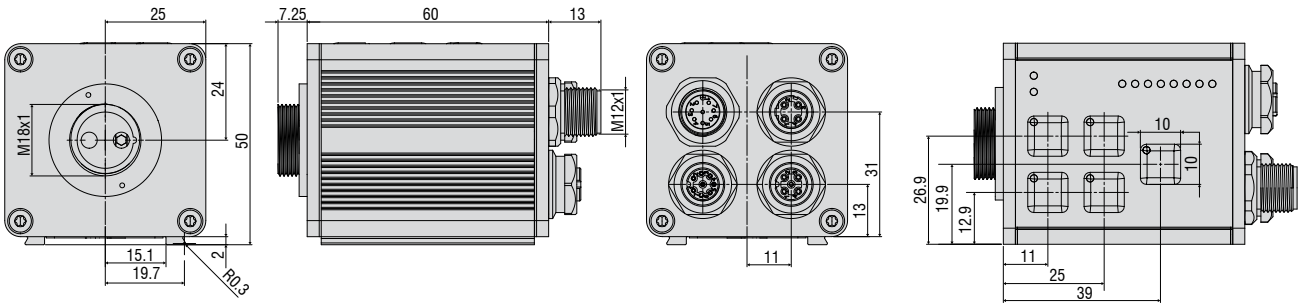

Dimensions:
Dimensions in mm, not to scale

colorSENSOR OT-3-LD

- ΔE — Repeatability in color ΔE ≤ 0.9
- Hz — Max. switching frequency 35 kHz
- INTER FACE — Interfaces: RS232 / USB
- Color memory for max. 31 colors per teach-in
- Measurement distance up to 900 mm
- Also suitable for color control of self-luminous objects

The colorSENSOR OT sensors are ideal for color determination from a large distance according to the True Color method. The OT series consists of sensor types with different working distances and spot sizes. The sensor housing of the OT3 color sensors includes the detector, the evaluation unit and the illumination so that no external controller is required.

Using a modulated white light LED, a white light spot is projected via the integrated lens onto the measuring object to be tested. Part of the light that is back scattered from the measuring object is directed onto a perceptive True Color detector element via the center of the lens, separated into long-, medium- and short-wave light components. Subsequently, it is transformed into L*a*b* color values.

A key on the sensor housing enables to teach in 31 colors/color groups. Using the separate configuration software, the sensor can be adjusted to the current measuring situation. If the sensor recognizes one of the taught colors, the color group is output via the corresponding digital switching outputs.

The OT sensor is also suitable for detecting the color of self-luminous objects. For this purpose, the internal illumination can optionally be deactivated via the software.

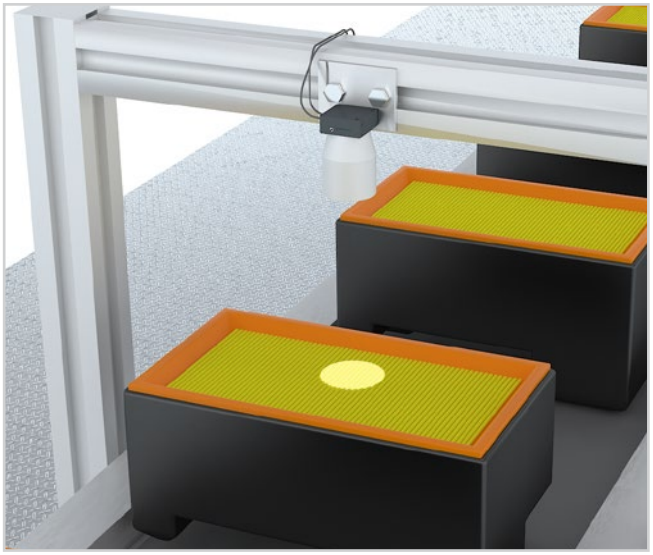

The True Color sensors of the OT3 series are designed for measuring tasks where a large distance from the measuring object must be maintained.

Model		OT-3-LD-200-6	OT-3-LD-200-12	OT-3-LD-200-26	OT-3-LD-500-23	OT-3-LD-500-50
Part number		10234434	10234437	10234438	10234085	10234086
Working distance	Start	100 mm	50 mm	50 mm	100 mm	100 mm
	Optimal	200 mm	200 mm	200 mm	500 mm	500 mm
	End	700 mm	500 mm	500 mm	900 mm	900 mm
Measurement spot diameter	Start	4 mm	4 mm	6 mm	6 mm	8 mm
	Optimal	6 mm	12 mm	26 mm	25 mm	58 mm
	End	28 mm	32 mm	70 mm	46 mm	105 mm
Light spot diameter	Start	4 mm	4 mm	6 mm	6 mm	8 mm
	Optimal	6 mm	12 mm	26 mm	25 mm	58 mm
	End	28 mm	32 mm	70 mm	46 mm	105 mm
Repeatability [1]		ΔE ≤ 0.9			ΔE ≤ 1.5	
Color distance		ΔE ≤ 1.8			ΔE ≤ 3.0	
Spectral range		400 ... 680 nm				
Color spaces		X/Y INT; s/i M (Lab)				
Illuminants		white light LED				
Standard observer		2°				
Tolerance model		3D (sphere; TOL); 2D (cylinder; CTO&ITO)				
Color memory		max. 31 colors in non-volatile EEPROM with parameter sets				
Measuring rate		max. 35 kHz (depending on number of colors learned and setting for averaging)				
Temperature stability		< 0.01 % FSO / K				
Light source		ultra-bright white light LED, AC/DC/PULSE modes (adjustable or OFF for self-luminous objects, switchable via software) [2]				
Permissible ambient light		max. 5,000 lx (in AC and PULSE modes)				
Synchronization		Possibility of synchronization is given				
Supply voltage		+24 VDC (± 10 %), reverse polarity protection, overload-proof				
Max. current consumption		160 mA				
Signal input		1 key and IN0 for external teaching of the color references				
Digital interface		RS232 (max. 115200 kBaud) (optional USB or Ethernet via converter)				
Switching output		OUT0 - OUT4, digital (0V/+Ub), short circuit proof, 100 mA max. switching current NPN-, PNP-capable (switchable light/dark switching)				
Digital output		none				
Connection		8-pin flange socket (Binder Series 712) (Power/PLC); 4-pin flange socket (Binder Series 707) (PC)(see accessories for connection cable)				
Mounting		with two slotted holes (8 x 4.5 mm)				
Temperature range	Storage	-20 … +85 °C				
	Operation	-20 … +55 °C				
Humidity		20 … 80 % r. H. (non-condensing)				
Protection class (DIN EN 60529)	Optics	IP67				
	Controller	IP64				
Material		Aluminum black anodized (lens support: aluminum, naturally anodized)				
Weight		approx. 300 g			approx. 670 g	
Control and display elements		1 key for external teaching of the color references; switching state display with 5 yellow LEDs				
Features		manual adaption of illumination brightness, amplification of measurement signal and averaging; adjustable hold time of 0 ... 30 ms				

FSO = Full Scale Output

[1] Maximum color distance ΔE of 250 successive measurements of the color value of a light gray reference tile (R = 61%), measured with sensor FAR-T-A2.0-2,5-1200-67° at 1000 Hz and brightness adjustment with a white standard (R=95%)

[2] Suitable for illumination testing

OT-3-LD-200

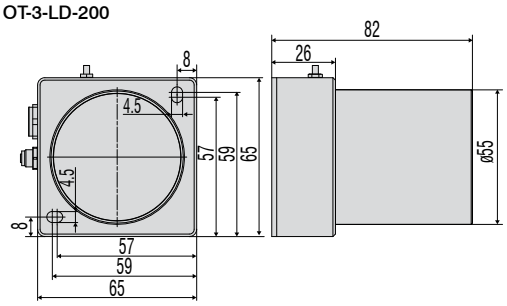

OT-3-LD-500

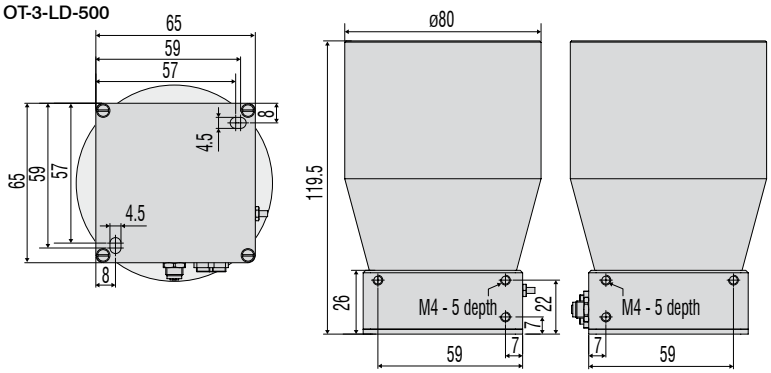

Dimensions:

Dimensions in mm, not to scale

Connection cables		Mounting	Sensor	Accessories
Supply/RS232 Power supply unit PS2031 Art. no. 2420096 Connection PLC (I/O) 	Art. no. 11234717 (2 m) 11234718 (5 m) 	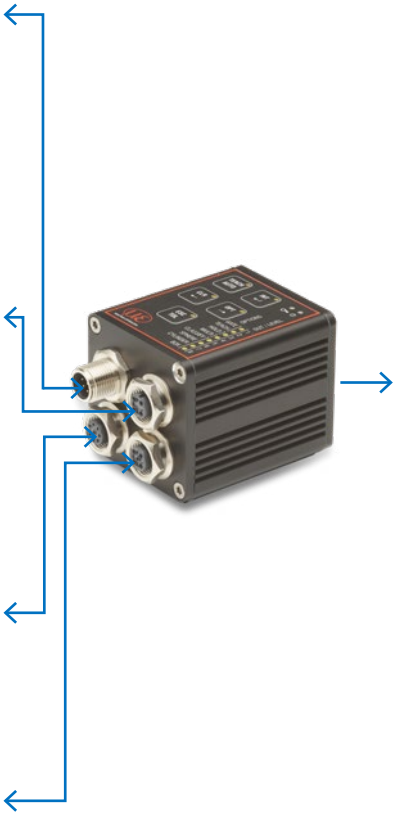	CSF1 CSF2 CSF3 CSF4 	White standard Art. no. 11234694 11234695
Digital output/ Ethernet 	Art. no. 11234735 (2 m) 11234736 (5 m) 			Vacuum feed-through Art. no. 10811916
Connection PLC (I/O) 	Art. no. 11234722 (2 m) 11234723 (5 m) 			C-mount lens Art. no. 11293186 and others
Process interfaces (USB) 	Art. no. 11234732 (2 m) 11234733 (5 m) 	Mounting adapter Art. no. 11234713 11234762 11234763 		

Pin assignment

CAB-M12-8P-co-fm-straight; Xm-PUR; open ends
(Art.-No.: 11234717; 11234718)
Connection cable SYS; Power and PLC
(max. length 10 m, PUR sheath)

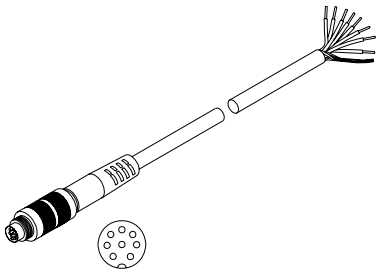

Pin	Color	CFO100/200
1	white	IN0
2	brown	+UB
3	green	TX
4	yellow	RX
5	gray	OUT0
6	pink	OUT1
7	blue	GND
8	red	OUT2

Connection cables		Mounting	Sensor	Accessories
Supply/PLC Power supply unit PS2031 Art. no. 2420096 	Art. no. 11234091 (2 m) 11234099 (5 m) 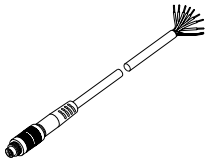	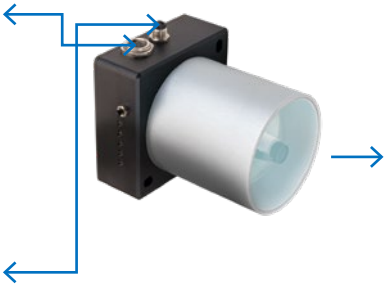	No separate sensor or cable - integrated in sensor head	White standard Art. no. 11234694 11234695
Digital output/ serial/Ethernet 	RS232 Art. no. 11234095 (2 m) 11234103 (5 m) USB Art. no. 11234096 (2 m) 11234104 (5 m) Ethernet Art. no. 11234910+11234735 (2.5 m) 11234910+11234736 (5.5 m)	Screw connection via integrated bore holes		

Pin assignment

CAB-M9-8P-co-straight; Xm-PUR; open ends
(Art.-No.: 11234091; 11234098)
Connection cable to power/PLC or digital I/O
(max. length 10 m, PUR sheath)

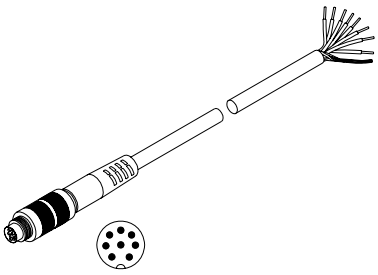

Pin	Color	OT-3-LD
1	white	GND (0V)
2	brown	+24 VDC (± 10%)
3	green	IN0
4	yellow	OUT0
5	gray	OUT1
6	pink	OUT2
7	blue	OUT3
8	red	OUT4

Customer-specific adaptations are possible for all sensors. We would be pleased to manufacture your sensor according to your specification/requirements. Please contact Micro-Epsilon Eltrotec!

Examples of customer-specific modifications:

Function
- Special types for CFS4 reflex sensor
- Special types for CFS3 transmission sensor or CFS1 angle sensor
- Special types for CFS5 receiving sensor

Optical fiber sheath
- Silicone-metal sheath
- VA stainless-steel sheath
- Metal sheath
- PVC metal sheath
- PVC special sheath
- BOA special sheath
- MA-radius-limiting special sheath

Fiber bundle diameter
- 0.6 / 1 / 1.5 / 2.5 / 3 mm

Optical fiber (length)
- Available from 300 mm
- Standard length 1,200 mm
- 600, 1,800 and 2,400 mm optionally available
- Individual length of 0.3 ... 2.4 m possible

Aperture angle
- Standard 67°
- Optional 22° / 35°

Ambient conditions
- Special versions with increased vibration resistance (VS)
- Special variants with special bonding for high temperatures (T250 / T400)
- Pressure-tight special variants with vacuum feed-through (up to 10^{-5} mbar)

Mountable lenses
- Focusing for small light spots (> 0.8 mm)
- Large object distances (= distance between sensor and measuring object) up to 200 mm
- Distances > 300 mm with C-mount lens

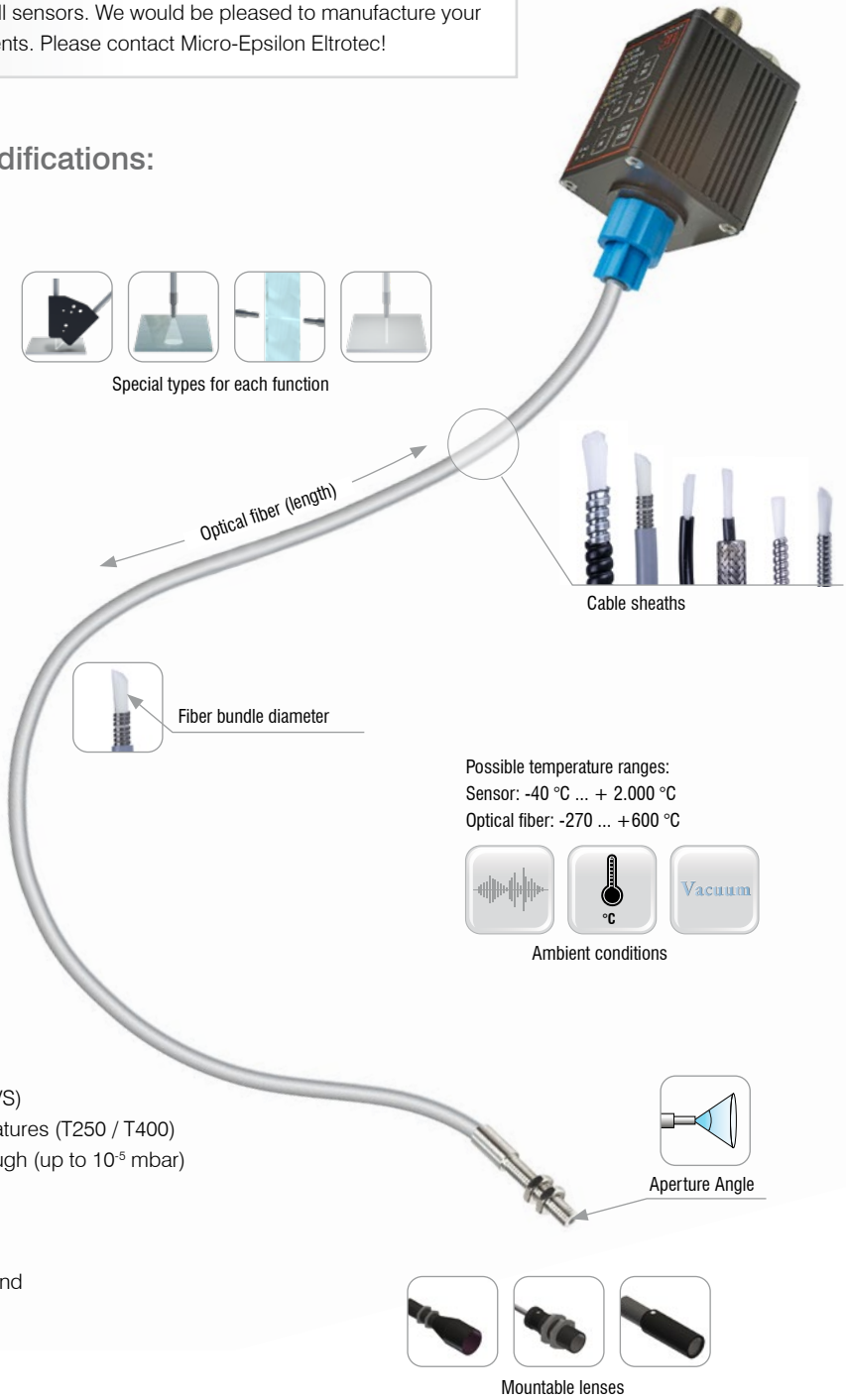

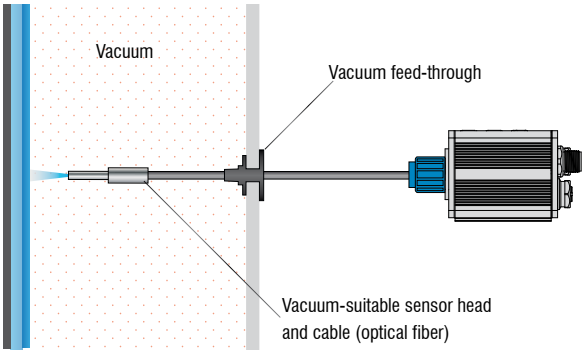

Vacuum suitability

The color sensors and optical fibers consist of passive components and do not give off heat. In vacuum, sensors (temperature bonding T250), optical fibers (stainless steel sheath), and the vacuum feed-through up to 10 - 5 mbar can be used.

In order to create a basis for worldwide color communication and standardized color measurement systems, the CIE (Commission internationale de l'éclairage, International Commission on Illumination) was founded in 1931 and is responsible for monitoring and inspection of internationally recognized color values. The observer was defined (see "Standard observer") in a study based on individual color impression.

Furthermore, light sources such as fluorescent lamps, candles, the sun etc. were defined as illuminants. If a sample is measured using a color measurement device, the factors illuminant and observer are standardized, adjustable parameters with international validity. The color perception of the test persons was defined in the standard spectral sensitivity functions $\bar{x}$ (long-), $\bar{y}$ (medium-) and $\bar{z}$ (short-wave).

Color assessment based on:

Hue: Color differentiation, e.g., red, green, blue, yellow, etc.

Brightness: Intensity of light perception, color appears darker or brighter

Colorfulness: Intensity of the color compared with a gray color (not colored) with the same brightness

Saturation: Describes the relation between colorfulness and brightness

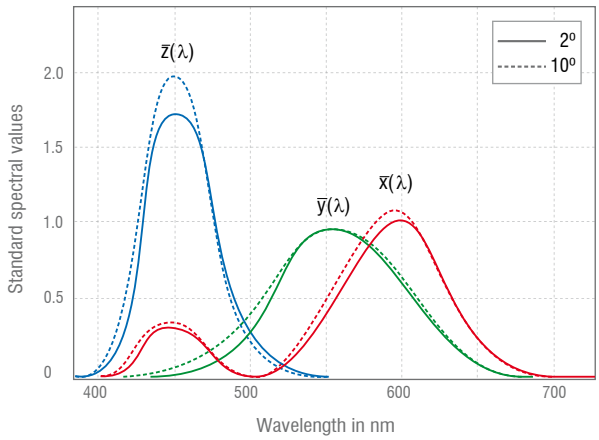

People perceive colors differently. In order to achieve perceptual uniformity, the International Commission on Illumination (CIE) stipulates spectral weighting functions. These functions describe how people perceive colors. They are based on experimentally determined sensitivity curves of the long-wave L-cone (X), medium-wave M-cone (Y) and short-wave S-cone (Z).

This is how each perceivable color can, due to its characteristics, be assigned an exact location in a color space and be communicated worldwide.

Color spaces

The human eye has three color receptors (L = long, M = middle, S = short). This is why 3D color models are used in order to clearly identify colors and to compare these with other colors (see color distance). In the industry, particularly the L*a*b* color space has become established.

Standard color space CIE 1931 (xyY color space)
This color space is based on perceived color in human color vision. (very large green and small blue/red range).
x and y = color vectors describing hue and saturation
Y = value (brightness) scaled from 0 to 100
W = white point (x=y=z=1/3)
Spectral lines = "pure" colors
Black body curve = color as temperature of an ideal, black radiator

! *Suitable for testing green and white LEDs.*

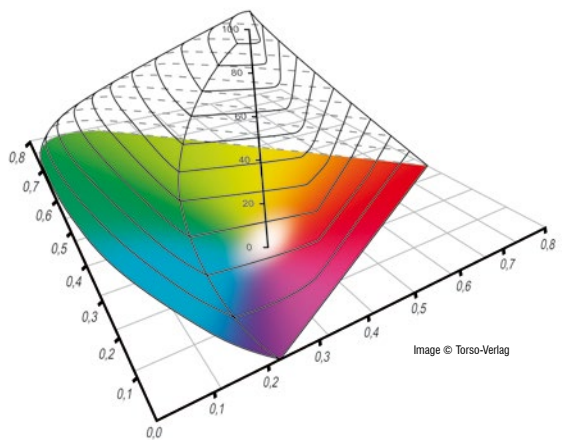

xyY Color space

Standard color space CIELAB76
The L*a*b color space comprises all colors perceptible to the human eye. In this 3D color model, each hue is described with approximately the same volume of space. The L*a*b* color space has established itself in the industry and is used by device manufactures for color inspection.

Each color is described by the color location (L*; a*; b*).
L* = lightness (black = 0; white = 100)
a* = green/red colors (green = -100; red = +100)
b* = blue/yellow colors (blue = -100; yellow = +100)

! *Ideal color space for color test, as each color range is the same size.*

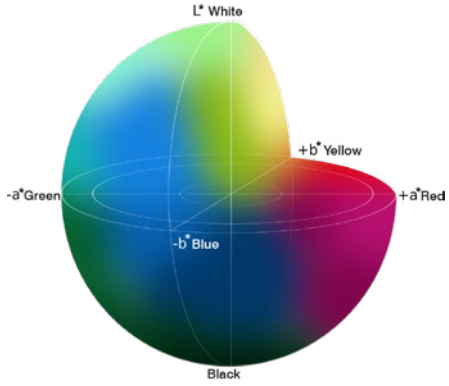

L*a*b* Color space

Color distance ΔE

The larger the difference between the colors within the color space, the more clearly the difference can be perceived with the human eye. This is defined as ΔE color distance.
Delta E; ΔE; dE = is a metric for the perceived color distance between colors (DIN 5033)

$$\Delta E = \sqrt{(L^*_p - L^*_v)^2 + (a^*_p - a^*_v)^2 + (b^*_p - b^*_v)^2}$$

ΔE of 11.61 corresponds to the difference between sample (p) and comparison (v)

$$\Delta E = \sqrt{(60^*_p - 55^*_v)^2 + (-38{,}6^*_p - (-30)^*_v)^2 + (-46^*_p - (-52)^*_v)^2} = 11{,}62$$

Interpretation:

ΔE > 5	Large color difference
ΔE 0.5 … 1	Limits of human perception
ΔE < 0.3	Required by the paper industry
ΔE < 0.1	Required by the automotive industry

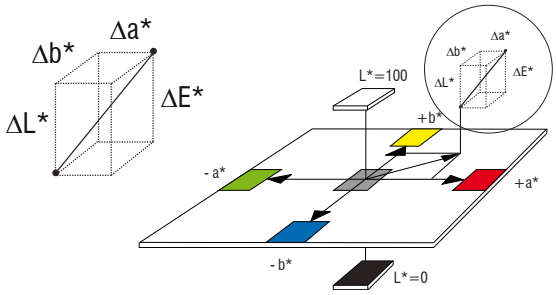

Sample (p)

Comparison (v)

RGB Color space

It combines the colors red (R), green (G) and blue (B) into one. It is an additive color space, i.e. all three colors as one result in the color white. Black color is produced when R/G/B = 0/0/0.

The RGB color space has established itself in the display industry but is of no interest for industrial measurement technology since not every color can be displayed and measured.

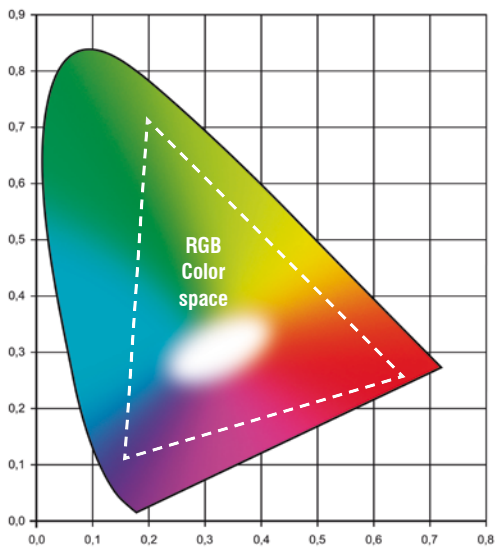

Image © Torso-Verlag

Standard illuminants and light sources

Standard illuminants are defined from 380 to 780 nm.

- **Illuminant A** = light bulb with 2865 k
- **Illuminant D65** = medium daylight with approx. 6500 k
- **Illuminant F11** = fluorescent lamp
- **Cold white LED**

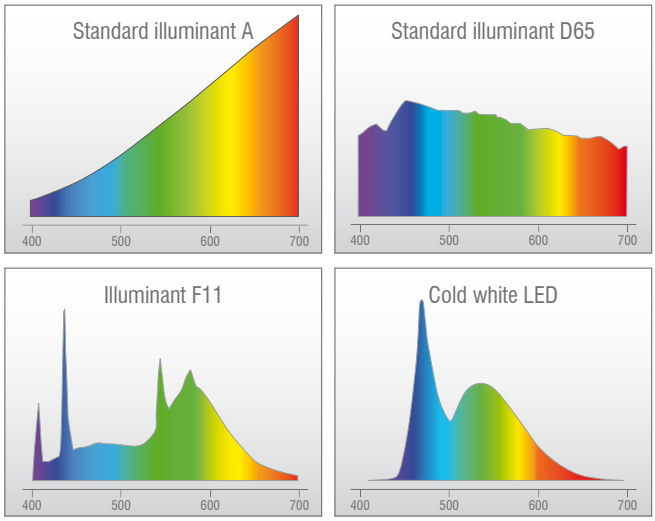

Measurement geometries

Standard sensor 45°x:0°, 20°x:0°, 14°x:0°

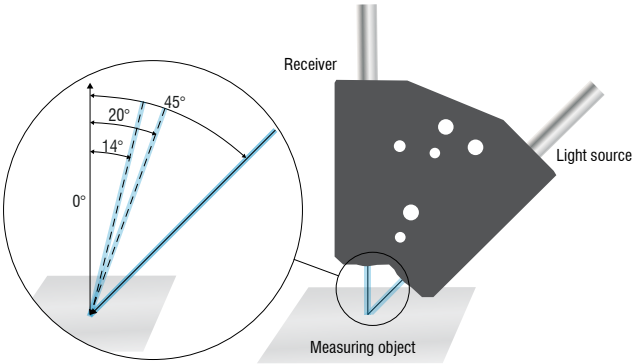

Circular sensor R34°c:0°, R11°c:0°

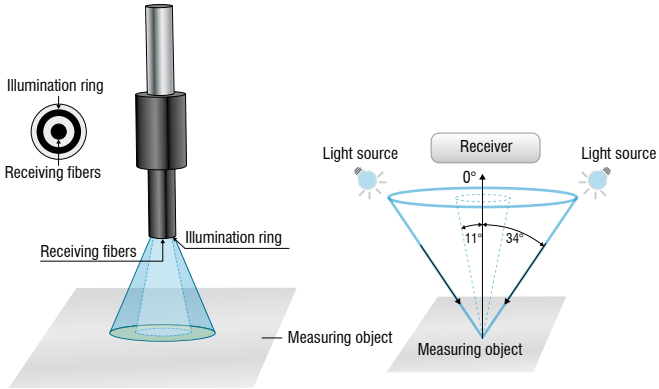

Transmission sensor 0°:180°

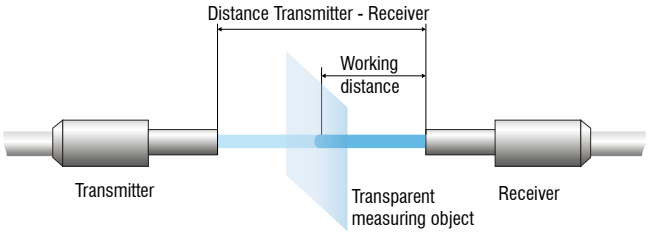

Reflex sensor 0°:0°

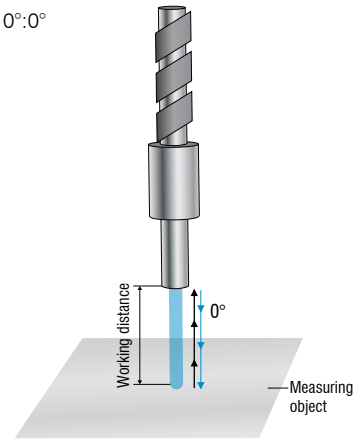

With structured surfaces, it is recommended to perform the inspection from all four directions (north, east, south, west on one side) and to calculate the average on different positions or to illuminate the specimen from all directions (ring illumination (R45°c:0°) and to measure only one position. With translucent samples, a defined background or folding the sample should provide sufficient layer thickness for the inspection. You can alternatively use some illumination as background in order to inspect in transmission (0°:180°) mode.

Sensors and Systems from Micro-Epsilon

Sensors and systems for displacement, distance and position

Sensors and measurement devices for non-contact temperature measurement

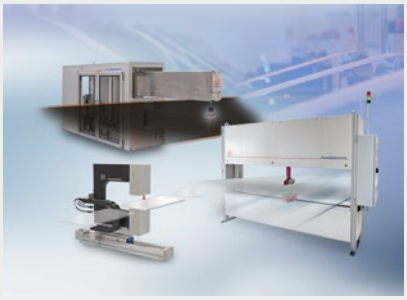

Measuring and inspection systems for metal strips, plastics and rubber

Optical micrometers and fiber optics, measuring and test amplifiers

Color recognition sensors, LED analyzers and inline color spectrometers

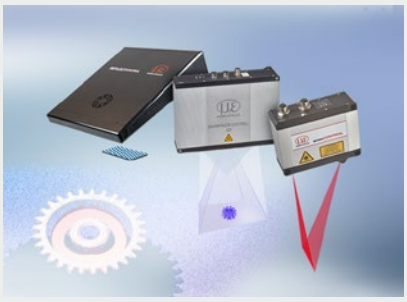

3D measurement technology for dimensional testing and surface inspection

Modifications reserved / Y9761371-G09207SGKE

MICRO-EPSILON

MICRO-EPSILON Eltrotec GmbH
Manfred-Wörner-Straße 101 · 73037 Göppingen / Germany
Tel. +49 (0)7161 98872-300 · Fax+49 (0)7161 98872-303
eltrotec@micro-epsilon.de · **www.micro-epsilon.com**